CLOCK CIRCUIT

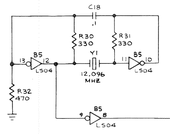

NOTE:
THE MPU IN THIS GAME OPERATES AT A FREQUENCY OF 1.5 MHZ. THEREFORE THE MPU CHIP MUST BE 6502A. THE 6502'S MAXIMUM FREQUENCY IS 1 MHZ AND IS NOT COMPATIBLE WITH THIS GAME.

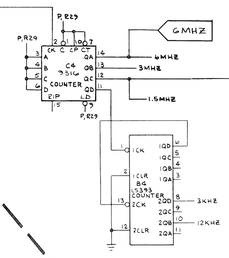

The clock circuit consists of crystal Y1 and associated inverters and counters C4 and B4. Counters C4 and B4 count the crystal frequency down to the frequencies necessary for the Asteroids game.

MPU CIRCUITRY

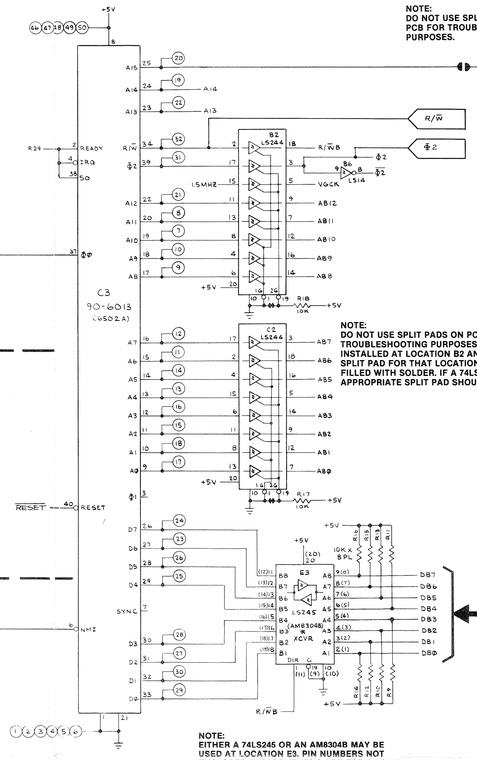

NOTE:
DO NOT USE SPLIT PADS ON PCB FOR TROUBLESHOOTING PURPOSES.

NOTE:
DO NOT USE SPLIT PADS ON PCB FOR TROUBLESHOOTING PURPOSES. IF A 74LS244 IS INSTALLED AT LOCATION B2 AND/OR C2, THE SPLIT PAD FOR THAT LOCATION SHOULD BE FILLED WITH SOLDER. IF A 74LS241 IS USED, THE APPROPRIATE SPLIT PAD SHOULD BE OPEN.

NOTE:
EITHER A 74LS245 OR AN AM8304B MAY BE USED AT LOCATION E3. PIN NUMBERS NOT ENCLOSED IN PARENTHESIS ARE FOR 74LS245. PIN NUMBERS IN PARENTHESIS ARE FOR AN AM8304B.

ADDRESS DECODING CIRCUITRY

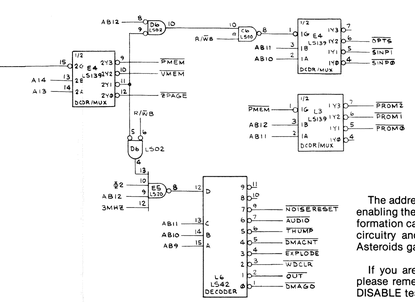

The address decoder performs the function of turning on or enabling the appropriate circuitry at the critical time, so that information can be transferred back and forth between the game circuitry and the MPU. The memory map below is for the Asteroids game.

If you are going to use the Automatic RAM/ROM Tester, please remember to remove MPU C3 and ground the WDOG DISABLE test point.

HEXADECIMAL	A15	A14	A13	A12	A11	A10	A9	A8	A7	A6	A5	A4	A3	A2	A1	A0	R/W	D7	D6	D5	D4	D3	D2	D1	D0	FUNCTION
	ADDRESS																	DATA								
0000-01FF		0	0				0	1	A	A	A	A	A	A	A	A		D	D	D	D	D	D	D	D	ZERO & ONE PAGE RAM
0200-02FF		0	0				1	0	A	A	A	A	A	A	A	A		D	D	D	D	D	D	D	D	PLAYER 1 RAM
0300-03FF		0	0				1	1	A	A	A	A	A	A	A	A		D	D	D	D	D	D	D	D	PLAYER 2 RAM
2001		0	1	0	0	0								0	0	1	R	D								3 KHz
2002		0	1	0	0	0								0	1	0	R	D								HALT
2003		0	1	0	0	0								0	1	1	R	D								HYPERSPACE SW
2004		0	1	0	0	0								1	0	0	R	D								FIRE SW
2005		0	1	0	0	0								1	0	1	R	D								DIAG. STEP
2006		0	1	0	0	0								1	1	0	R	D								SLAM SW
2007		0	1	0	0	0								1	1	1	R	D								SELF TEST SW
2400		0	1	0	0	1								0	0	0	R	D								LEFT COIN SW
2401		0	1	0	0	1								0	0	1	R	D								CENTER COIN SW
2402		0	1	0	0	1								0	1	0	R	D								RIGHT COIN SW
2403		0	1	0	0	1								0	1	1	R	D								1 PLYR START SW
2404		0	1	0	0	1								1	0	0	R	D								2 PLYR START SW
2405		0	1	0	0	1								1	0	1	R	D								THRUST SW
2406		0	1	0	0	1								1	1	0	R	D								ROT RIGHT SW
2407		0	1	0	0	1								1	1	1	R	D								ROT LEFT SW
2800		0	1	0	1	0									0	0	R							D	D	OPT SW (SW8, SW7)
2801		0	1	0	1	0									0	1	R							D	D	OPT SW (SW6, SW5)
2802		0	1	0	1	0									1	0	R							D	D	OPT SW (SW4, SW3)
2803		0	1	0	1	0									1	1	R							D	D	OPT SW (SW2, SW1)
3000		0	1	1	0	0	0										W									DMAGO
3200		0	1	1	0	0	1										W								D	2 PLYR START LAMP
3200		0	1	1	0	0	1										W							D		1 PLYR START LAMP
3200		0	1	1	0	0	1										W					D				RAMSEL
3200		0	1	1	0	0	1										W						D			COIN CNTRL LEFT
3200		0	1	1	0	0	1										W				D					COIN CNTRC CENTER
3200		0	1	1	0	0	1										W			D						COIN CNTRR RIGHT
3400		0	1	1	0	1	0										W									WDCLR
3600		0	1	1	0	1	1										W	D	D							EXPLOSION PITCH
3600		0	1	1	0	1	1										W			D	D	D	D			EXPLOSION VOLUME
3A00		0	1	1	1	0	0										W				D					THUMP VOLUME
3A00		0	1	1	1	0	0										W					D	D	D	D	THUMP FREQUENCY
3C00		0	1	1	1	1	0							0	0	0	W	D								SAUCER SOUND
3C01		0	1	1	1	1	0							0	0	1	W	D								SAUCER FIRE SOUND
3C02		0	1	1	1	1	0							0	1	0	W	D								SAUCER SOUND SELECT
3C03		0	1	1	1	1	0							0	1	1	W	D								SHIP THRUST SOUND
3C04		0	1	1	1	1	1							1	0	0	W	D								SHIP FIRE SOUND
3C05		0	1	1	1	1	1							1	0	1	W	D								LIFE SOUND
3E00		0	1	1	1	1	1										W									NOISE RESET
4000-47FF		1	0	0	0	A	A	A	A	A	A	A	A	A	A	A		D	D	D	D	D	D	D	D	VECTOR RAM
5000-57FF		1	0	1	A	A	A	A	A	A	A	A	A	A	A	A	R	D	D	D	D	D	D	D	D	VECTOR ROM
6800-7FFF		1	1	0	1	A	A	A	A	A	A	A	A	A	A	A	R	D	D	D	D	D	D	D	D	PROGRAM

POWER RESET AND WATCHDOG COUNTER

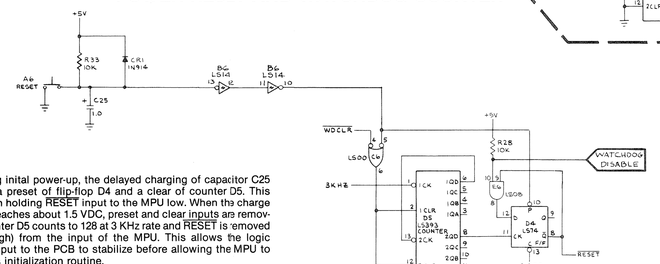

During inital power-up, the delayed charging of capacitor C25 causes a preset of flip-flop D4 and a clear of counter D5. This results in holding RESET input to the MPU low. When the charge of C25 reaches about 1.5 VDC, preset and clear inputs are removed. Counter D5 counts to 128 at 3 KHz rate and RESET is removed (goes high) from the input of the MPU. This allows the logic power input to the PCB to stabilize before allowing the MPU to begin its initialization routine.

If the MPU program is operating properly, the MPU address decoding circuitry will output the WDCLR (Watchdog clear) signal at predetermined intervals. This serves to clear counter D5 before it counts up to the state that will create the RESET condition. If the MPU program strays from its intended sequence and does not output the WDCLR signal, counter D5 will count up to the RESET state and cause the MPU to return to its initialization routine.

denotes change by indicated revision

denotes a test point

NMI COUNTER

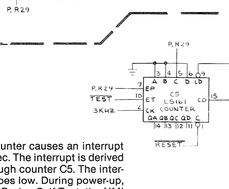

The NMI (non-maskable interrupt) counter causes an interrupt at the NMI input of the MPU every 4 msec. The interrupt is derived by dividing 3 KHz by a factor of 12 through counter C5. The interrupt occurs when pin 6 of inverter B5 goes low. During power-up, the NMI counter is disabled by RESET. During Self-Test, the NMI is disabled by TEST.

POWER INPUT

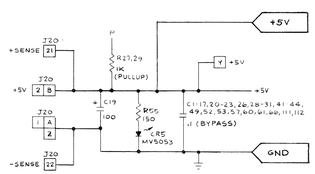

This circuitry consists of the PCB inputs and outputs for the +5 VDC logic power and 36 VAC input to the on board regulators. The +5 VDC inputs and outputs are discussed on Sheet 1, Side A of this schematic set.

The 36 VAC inputs are received by two full wave rectifiers. Diodes CR9 and CR10 rectify the negative cycle of the input and the 7915 regulates the voltage at −15 VDC. Diodes CR11 and CR12 rectify the positive pulse of the 36 VAC input and the 7815 regulates the voltage at +15 VDC. The 7812 regulates at +12 VDC. The 7805 regulates an additional 5 VDC for the DACs. Zener diode CR14 supplies the +8.2 VDC for the sample and hold circuit. The +22V (unregulated) is used to power operational amplifiers P11 and L8 in the audio output.

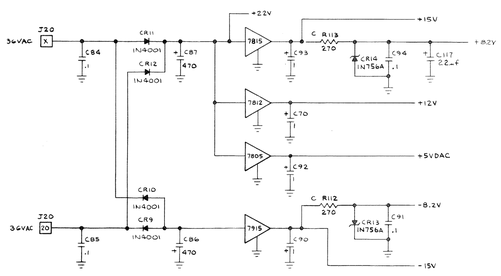

ROM/PROM CIRCUITRY

FROM SWITCH INPUTS SHEET 2, SIDE B

Program Memory for the Asteroids game is contained in PROMs for the -01 version of the PCB or ROMs for the -02 version of the PCB. One ROM is equivalent to four PROMs. All PROMs connected to a common enable must be removed before replacing with a ROM. For example, remove PROMs at locations F2, H1, L2 and L1 before replacing with ROM at location F1.

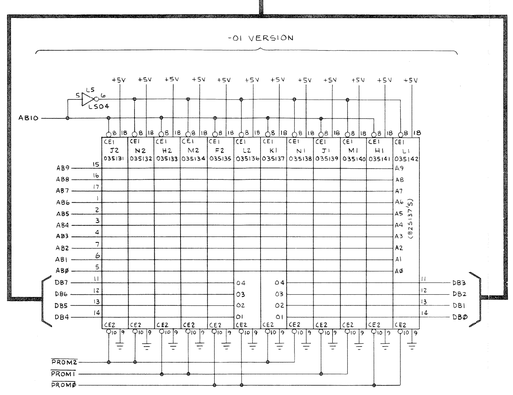

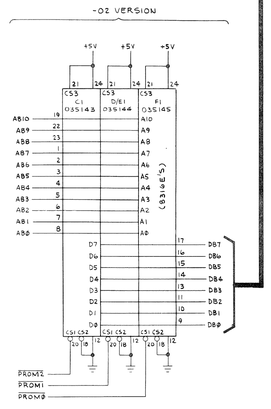

RAM CIRCUITRY

The RAM is the temporary storage space for the MPU and is enabled when ZPAGE (Zero Page enable) is low. When R/WB (from the MPU) is low, the RAM stores the data byte input (DB0 thru DB7) at the location addressed by the MPU address bus (AB0 thru AB7). When R/WB is high, the MPU reads the stored data byte at the addressed location.

The signal RAMSEL, when low, has the effect of swapping pages 2 and 3 within the RAM. This allows greater programming flexibility.

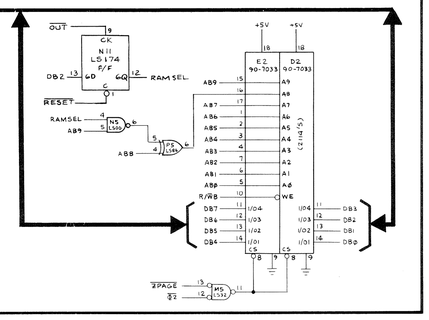

Memory Components and Their Equivalents (Locations Shown in Bold)

-01 P.C. Boards (PROMs)	Alternate -01 P.C. Boards (PROMs)	-02 P.C. Boards (ROMs)
035131-01 J2	035150-01 J2	035143-01 C1
035132-01 N2		
035137-01 K1	035153-01 K1	
035138-01 N1		
035133-01 H2	035151-01 H2	035144-01 D/E1
035134-01 M2		
035139-01 J1	035154-01 J1	
035140-01 M1		
035135-01 F2	035152-01 F2	035145-01 F1
035136-01 L2		
035141-01 H1	035155-01 H1	
035142-01 L1		

NOTICE TO ALL PERSONS RECEIVING THIS DRAWING CONFIDENTIAL Reproduction forbidden without the written consent of ATARI, INC., 1265 Borregas Ave., Sunnyvale, California. This drawing is only conditionally issued and neither receipt nor possession thereof confers or transfers any right in or license to use the subject matter of the drawing or any design or technical information shown thereon for any purpose whatsoever nor any right to copy thereof except for manufacture by vendors of Atari, Incorporated and for manufacture under the corporation's written license, no right to reproduce hereunder is granted or the subject matter thereof unless by written agreement with or written permission from the corporation.

ATARI

A Warner Communications Company

Sheet 1, Side B

ASTEROIDS/CABARET

Microprocessor

Section of 034986-XX G

© 1979 Atari, Inc.