ADJUSTMENT ON GAME PC BOARD (NIGHT STRIKER G25 00531A)

P CONNECTOR

1	+24V	5	MOTOR 1(-)	9	MOTOR 3(-)
2	+24V	6	MOTOR 2(+)	10	GND
3	POST	7	MOTOR 2(-)	11	GND
4	MOTOR 1(+)	8	MOTOR 3(+)	12	GND

H CONNECTOR

1	GND	5	+5V	9	POST
2	GND	6	+5V	10	
3	GND	7	+5V	11	
4	GND	8	+5V	12	

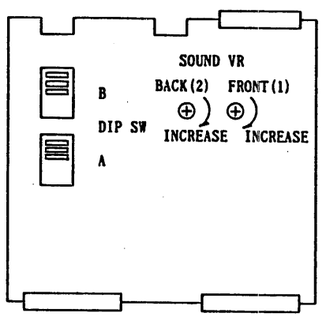

C CONNECTOR

1	+12V
2	+12V
3	+5V
4	+5V
5	POST
6	GND
7	GND
8	GND

V CONNECTOR

1	VIDEO GND
2	VIDEO R
3	VIDEO G
4	VIDEO BL
5	VIDEO SYNC

G CONNECTOR

SOLDER SIDE		COMPONENTS SIDE	
GND	A	1	GND
GND	B	2	GND
+5V	C	3	+5V
+5V	D	4	+5V
-5V	E	5	-5V
+13V	F	6	+12V
POST	H	7	POST
COIN COUNTER (B)	J	8	COIN COUNTER (A)
COIN LOCKOUT (B)	K	9	COIN LOCKOUT (A)
SPEAKER L (-)	L	10	SPEAKER L (+)
SPEAKER R (-)	M	11	SPEAKER R (+)
SOUND VOLUME 1	N	12	SOUND VOLUME 2
MUTE	P	13	SOUND VOLUME 3
SERVICE SW	R	14	BODY SONIC (+)
	S	15	BODY SONIC (-)
(COIN B)	T	16	COIN A
	U	17	SELECT A
SHOT LAMP	V	18	
START LAMP	W	19	
	X	20	
	Y	21	
	Z	22	1P TORIGGER
	a	23	1P SHOT BUTTON
1P ADJX	b	24	1P ADX
1P ADJY	c	25	1P ADY
H. PHONE (-)	d	26	H. PHONE (+)
GND	e	27	GND
GND	f	28	GND

☆ THE CONTROL OF THIS GAME USES ONE ANAROGUE LEVER AND 2 BUTTONS.

NOTE: BEFORE CHANGING THE SETTINGS OF DIP SWITCHES. TURN THE POWER OFF.

◇ SETTING OF DIP SWITCH A

(*) : FACTORY SETTING

SETTINGS	POSITIONS	1	2	3	4	5	6	7	8
GAME STYLE	COCKPIT	OFF	OFF	-					
	UPRIGHT	ON							
TEST MODE	* NORMAL GAME			OFF					
	TEST MODE			ON					
ATTRACT SOUND	* WITH				OFF				
	WITHOUT				ON				
PLAY PRICING	* 1 COIN 1 PLAY					OFF	OFF		
	2 COINS 1 PLAY					ON			
	3 COINS 1 PLAY					OFF	ON		
	4 COINS 1 PLAY					ON			
CONTINUED PLAY PRICING	* 1 COIN 1 PLAY							OFF	OFF
	1 COIN CONTINUE							ON	
	2 COINS CONTINUE							OFF	ON
	3 COINS CONTINUE							ON	

◇ SETTING OF DIP SWITCH B

SETTINGS	POSITIONS	1	2	3	4	5	6	7	8
GAME DIFFICULTY EASY(A) → DIFFICULT(D)	* RANK B	OFF	OFF						
	RANK A	ON							
	RANK C	OFF	ON						
	RANK D	ON							
NUMBER OF ADDING SHIELD(S)	* 1			OFF	OFF				
	3			ON					
	2			OFF	ON				
	0			ON					
NUMBER OF SHIELDS AT GAME START	* 5					OFF	OFF		
	6					ON			
	4					OFF	ON		
	3					ON			
CONTINUED PLAY	* WITH							OFF	
	WITHOUT							ON	
TRIGGER TURBO	* 7 SHOTS/SEC.								OFF
	10 SHOTS/SEC.								ON

REVISIONS			
LTR	DESCRIPTION	DATE	APPROVED

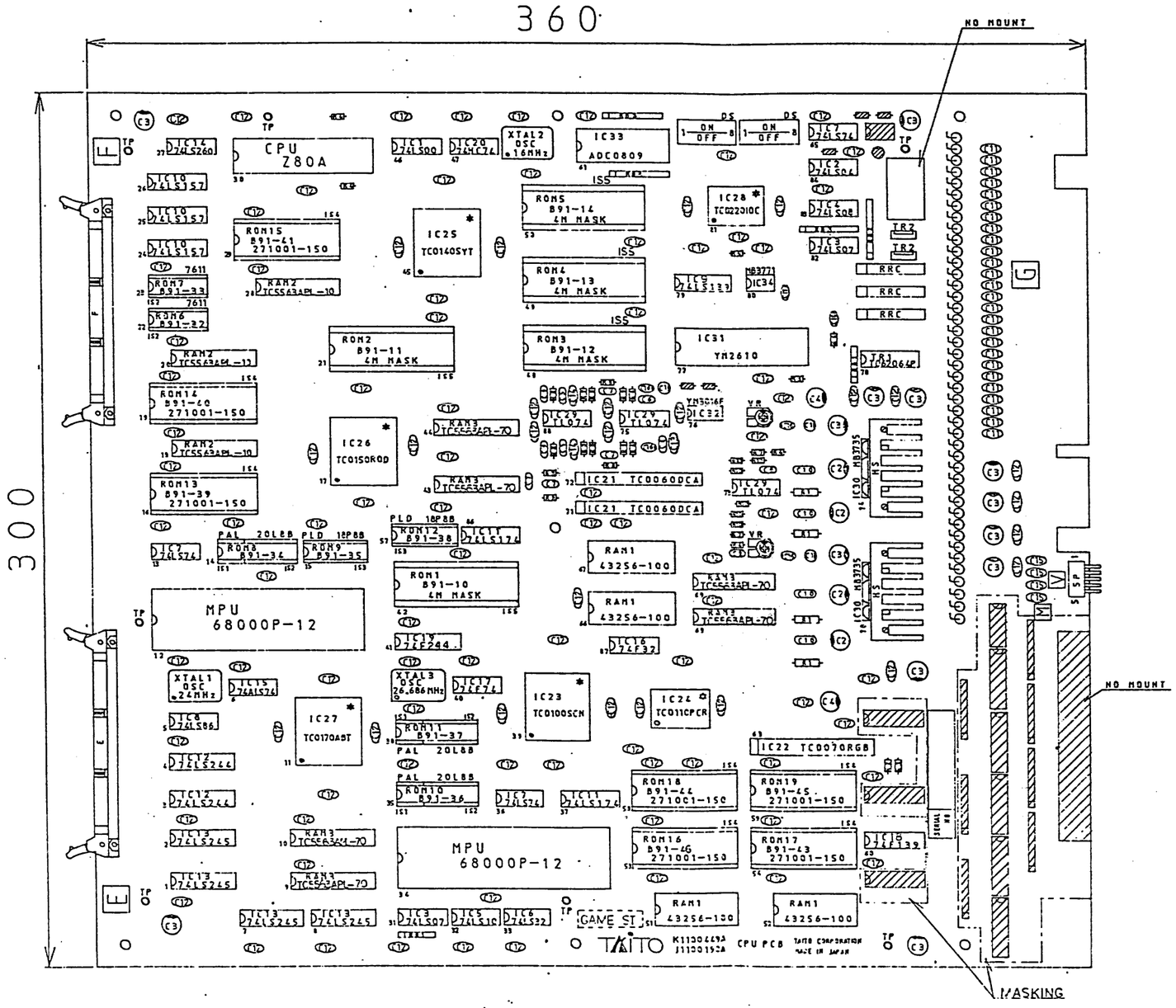

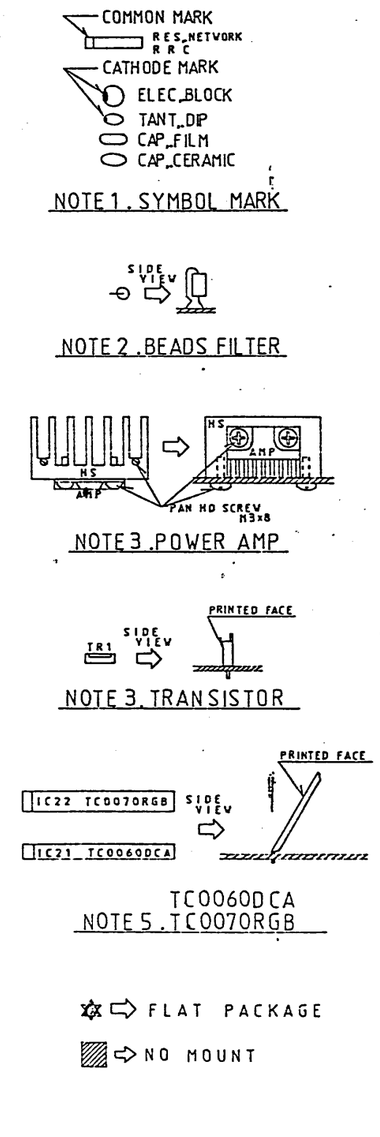

一般公差(±)					
呼称寸法	1級	2級	3級	4級	5級
5 マデ	0.1	0.1	0.2	0.3	0.5
5~15	0.1	0.2	0.3	0.5	0.8
15~50	0.2	0.3	0.5	0.8	1.2
50~100	0.3	0.5	0.8	1.2	1.8
100~250	0.5	0.8	1.2	1.8	3.0
250~500	0.8	1.2	1.8	3.0	5.0
500~1500	1.2	1.8	3.0	5.0	8.0
角度公差	20'	40'	1°30'	3°	

THIRD ANGLE PROJECTION

UNLESS OTHERWISE SPECIFIED DIMENSIONS ARE IN MILLIMETRES

TOLERANCES
GENERAL ±
HOLE DIA ± -
ANGLES ±

MATERIAL

FINISH

DO NOT SCALE DRAWING

DRAWN 6. 2. '89

DESIGN F. Kanebo

CHECK K Morita

APPROVED

APPROVED

TAITO TAITO CORPORATION

NAME CPU PCB ASSY -TAMCC-

SIZE A2 NIGHT STRIKER

DWG. NO. K1100448A

SCALE

RELEASE DATE

SHEET 1/2

REVISIONS				
LTR	DESCRIPTION		DATA	APPROVED

ITEM NO.	SYM	PART OR IDENTIFYING NO.	NOMENCLATURE OR DESCRIPTION	QTY REQD
156				
155				
154				
153				
152				
151				
150				
149				
148				
147				
146				
145				
144				
143				
142				
141				
140				
139				
138				
137				
136				
135			GAME STICKER (K1100448A)	1
134				
133	L	C1101201A	BEADS FILTER ZBF503-01TA	43
132				
131	TP	C0600403A	TEST POINT CHIP L=7.8	7
130				
129	S5	C0550090A	I.C. SOCKET 40P	5
128	S4	C0550085A	32P	7
127	S3	C0550052A	20P	2
126	S2	C0550033A	16P	5
125	S1	C0550001A	I.C. SOCKET 8P	3
124				
123	E.F	C0510566A	A-PIN HEADER MIL HIF3BA60PA	2
122	5P	C0500118A	H-CONNECTOR BS05P-SHF-1 (SIDE)	1
121				
120	DS	C0200117A	DIP SWITCH DSS-8	2
119				
118	ROM19	B2004174A	ROM B91-45 271001-150	1
117	ROM18	B2004173A	ROM B91-44	1
116	ROM17	B2004172A	ROM B91-43	1
115	ROM16	B2004202A	ROM B91-46	1
114	ROM15	B2004170A	ROM B91-41	1
113	ROM14	B2004169A	ROM B91-40	1
112	ROM13	B2004168A	ROM B91-39 271001-150	1
111	ROM12	B2004167A	PLD B91-38 18P8B	1
110	ROM11	B2004166A	PAL B91-37 20L8B	1
109	ROM10	B2004165A	PAL B91-36 20L8B	1
108	ROM9	B2004164A	PLD B91-35 18P8B	1
107	ROM8	B2004163A	PAL B91-34 20L8B	1
106	ROM7	B2004162A	ROM B91-33 7611	1
105	ROM6	B2004161A	ROM B91-32 7611	1
104	ROM5	B2004062A	ROM B91-14 4M MASK	1
103	ROM4	B2004061A	ROM B91-13	1
102	ROM3	B2004060A	ROM B91-12	1
101	ROM2	B2004059A	ROM B91-11	1
100	ROM1	B2004058A	ROM B91-10 4M MASK	1
99				
98	IC34	B17Z2531A	RESET I.C. MB3771	1
97	IC33	B17Z2203A	A/D CONVERTER ADC0809CCN	1
96	IC32	B17Z2180A	D/A CONVERTER YM3016F	1
95	IC31	B17Z2016A	SOUND LSI YM2610	1
94				
93		P0600022A	PAN HD SCREW M3X8	8
92	HS	A9000197A	HEAT SINK TA1TO-00001-02	2
91	IC30	B17Z1607A	POWER AMP MB3735	2
90	IC29	B17Z0322A	OP-AMP TL074	3
89				
88	IC28	B16Z0047A	CUSTOM I.C. TC0220IOC	1
87	IC27	B16Z0042A	TC0170ABT	1
86	IC26	B16Z0039A	TC0150ROD	1
85	IC25	B16Z0037A	TC0140SYT	1
84	IC24	B16Z0035A	TC0110PCR	1
83	IC23	B16Z0034A	TC0100SCN	1
82	IC22	B16Z0033A	TC0070RGB	1
81	IC21	B16Z0031A	CUSTOM I.C. TC0060DCA	2
80				
79	RAM3	B10X0030B	S-RAM TC5563APL-70	6
78	RAM2	B10X0030A	S-RAM TC5563APL-100	3
77	RAM1	B10X0029B	S-RAM μPD43256-100	4
76				
75	MPU	B08X3002B	MPU 68000-12	2
74	CPU	B08X2014B	CPU Z80A	1
73				
72	IC20	B07X2074A	HC-MOS I.C. 74HC74	1
71				
70	IC19	B05X2244A	F I.C. 74F244	1
69	IC18	B05X2139A	74F139	1
68	IC17	B05X2074A	74F74	1
67	IC16	B05X2032A	F I.C. 74F32	1
66				
65	IC15	B04X0074A	ALS I.C. 74ALS74	1
64				
63	IC14	B01X0260A	LS I.C. 74LS260	1
62	IC13	B01X0245A	74LS245	4
61	IC12	B01X0244A	74LS244	2
60	IC11	B01X0174A	74LS174	2
59	IC10	B01X0157A	74LS157	3
58	IC9	B01X0139A	74LS139	1
57	IC8	B01X0086A	74LS86	1
56	IC7	B01X0074A	74LS74	3
55	IC6	B01X0032A	LS I.C. 74LS32	1
54	IC5	B01X0010A	LS I.C. 74LS10	1
53	IC4	B01X0008A	74LS08	1
52	IC3	B01X0007A	74LS07	2
51	IC2	B01X0004A	74LS04	1
50	IC1	B01X0000A	LS I.C. 74LS00	1
49				
48	XTAL3	A9000171A	X-TAL OSC 26.686MHz	1
47	XTAL2	A9000143A	X-TAL OSC 16MHz	1
46	XTAL1	A9000122A	X-TAL OSC 24MHz	1
45				
44	RRC	A2239003A	RRC 48CR-1E2B	3
43				
42	RB3	A2231089A	RES BLOCK 10K OHM 1/8W 8E	3
41	RB2	A2231057A	RES BLOCK 470 OHM 1/8W 8E	1
40	RB1	A2230065A	RES BLOCK 1K OHM 1/8W 4E	2
39				
38	VR	A2102411A	V.R. TM8KV2-1S35K	2
37				
36	R10	A2004101A	RES CARBON 33K OHM 1/6W ±5%	6
35	R9	A2004093A	15K	2
34	R8	A2004086A	7.5K	10
33	R7	A2004085A	6.8K	2
32	R6	A2004081A	4.7K	3
31	R5	A2004073A	2.2K	1
30	R4	A2004065A	1K	4
29	R3	A2004057A	470	2
28	R2	A2004041A	100 OHM 1/6W ±5%	1
27	R1	A2000470A	RES CARBON 1 OHM 1/2W ±5%	4
26				
25	C17	A1320319A	CAP TANT DIP 16V 10μF	1
24	C16	A1320315A	CAP TANT DIP 16V 4.7μF	5
23				
22	C15	A1200251A	CAP CERAMIC 50V 180p	4
21	C14	A1200249A	50V 150p	2
20	C13	A1200241A	50V 68p	1
19	C12	A1200123A	25V 1000000p	108
18	C11	A1200115A	CAP CERAMIC 25V 10000p	26
17				
16	C10	A1100170A	CAP FILM 50V 100000p	4
15	C9	A1100151A	50V 15000p	2
14	C8	A1100147A	50V 10000p	2
13	C7	A1100143A	50V 6800p	4
12	C6	A1100132A	50V 2200p	2
11	C5	A1100128A	CAP FILM 50V 1500p	2
10				
9	C4	A1000143A	CAP ELEC BLOCK 16V 1000μF	2
8	C3	A1000135A	16V 220μF	13
7	C2	A1000131A	16V 100μF	4
6	C1	A1000119A	CAP ELEC BLOCK 16V 10μF	3
5				
4	TR2	A0100360A	TRANSISTOR 2SD1584	2
3	TR1	A0100262A	TRANSISTOR ARRAY TD62064P	1
2				
1		J1100190A	CPU PCBOARD 360X330	1

DRAWN 6.2.'89

DESIGN F. Yuuki

CHECK K Morita

APPROVED

APPROVED

TAITO CORPORATION

NAME CPU P C B ASSY
-TAMCO-

SIZE A2 | CODE IDENT NO. NIGHT STRIKER | DWG NO. K1100448A

SCALE | RELEASE DATE | SHEET 2/2

REVISIONS			
LTR	DESCRIPTION	DATE	APPROVED

(2-7D)(3-6D)(4-6C)(5-7C)(10-7C)
(13-6D)(14-6C)(16-7A)(18-6C)(23-6D)

MA-BUS

12MH (9-2B)(2B)

68000-12 IC34

15	CLK	A01	29	MA1
20	E	A02	30	MA2
18	RESET	A03	31	MA3
		A04	32	MA4
		A05	33	MA5
/MAS 6	AS	A06	34	MA6
/MUDS 7	UDS	A07	35	MA7
/MLDS 8	LDS	A08	36	MA8
10	DTACK	A09	37	MA9
19	VMA	A10	38	MA10
21	VPA	A11	39	MA11
		A12	40	MA12
+5V 13	BR	A13	41	MA13
12	BGACK	A14	42	MA14
11	BG	A15	43	MA15
17	HALT	A16	44	MA16
22	BERR	A17	45	MA17
		A18	46	MA18
25	IPL0	A19	47	MA19
24	IPL1	A20	48	MA20
23	IPL2	A21	50	MA21
		A22	51	MA22
MFC0 28	FC0	A23	52	MA23
MFC1 27	FC1	D00	5	MD0
MFC2 26	FC2	D01	4	MD1
		D02	3	MD2
		D03	2	MD3
		D04	1	MD4
		D05	64	MD5
		D06	63	MD6
		D07	62	MD7
		D08	61	MD8
		D09	60	MD9
		D10	59	MD10
		D11	58	MD11
		D12	57	MD12
		D13	56	MD13
		D14	55	MD14
		D15	54	MD15
	R/ W	9		MR/W

20L8B IC 35

MR/W	1	22	
/MAS	2	21	/MROMOE0 (2-7A)
/MUDS	3	20	/MROMOE1 (2-5A)
/MLDS	4	19	/OBJCS (13-4C)(FCN)
MA23	5	18	/MRAMCS (2-2B)(2-2C)
MA22	6	17	
MA21	7	16	/SCNCS (3-7B)
MA20	8	15	/MCONCS (10-7B)
MA19	9		
MA18	10		
MA17	11		
MA16	13		
MA15	14		

VCC 24PIN GND 12PIN 300 MIL

MFC0 13
MFC1 1
MFC2 2
LS10 IC 32 12

(3-2B) /SCNDTA

20L8B IC 38

	23	22	
	1	21	CL (5-7B)
/MAS	2	20	MI/01 (14-6C)
/MUDS	3	19	MI/02 (4-7C)
/MLDS	4	18	MOTOR (16-7A)
MA23	5	17	
MA22	6	16	
MA21	7	15	
MA20	8		
MA19	9		
MA18	10		
OBJDTA (FCN)	11		
	13		
MCOMDTA (10-7B)	14		

VCC 24PIN GND 12PIN 300 MIL

LS174 IC 85

3	1D	1Q	2
4	2D	2Q	5
6	3D	3Q	7
11	4D	4Q	10
13	5D	5Q	12
14	6D	6Q	15
1	CLR		
9			

+5V
12MH (6D)

18P8A IC 57

	1	19	
/MAS	2	18	
MA1	3	17	
MA2	4	16	
MA3	5	15	
	6	14	(3-1C) V-BL (23-C6)
	7	13	ADWR
	8	12	ADRD (23-C6)
MR/W	9		
	11		

LS74 IC 36

10	S	Q	9
13	C		
12	D		
11		Q	8

LS74 IC 13

4	S	Q	5
1	C		
2	D		
3		Q	6

ADINT (23-C6)

MD-BUS
(2-1A)(3-7C)(4-6B)
(5-7D)(11-7B)(18-5D)
(14-6C)(16-6D)(18-7D)
(23-7D)

+5V
RB1 1KΩ
RB1 1KΩ

LS07 IC 31

10		11
12		13

/RESET (14-5D)

DRAWN	'89.6.2
DESIGN	K. Moriyama
CHECK	K.Mouri
APPROVED	
APPROVED	

TAITO CORPORATION

NAME CPU P.C.B

SCHEMATIC DIAGRAM

SIZE	CODE	DWG. NO.
A3	ナイトストライカー	W5100330A

SCALE	RELEASE DATE	SHEET
1 / 1		1 / 26

(1-5A)

MA-BUS

REVISIONS			
LTR	DESCRIPTION	DATE	APPROVED

271001/1000 IC 58

MA1	12	A0	D0	13	MD0
MA2	11	A1	D1	14	MD1
MA3	10	A2	D2	15	MD2
MA4	9	A3	D3	17	MD3
MA5	8	A4	D4	18	MD4
MA6	7	A5	D5	19	MD5
MA7	6	A6	D6	20	MD6
MA8	5	A7	D7	21	MD7
MA9	27	A8			
MA10	26	A9			
MA11	23	A10			
MA12	25	A11			
MA13	4	A12			
MA14	28	A13			
MA15	29	A14			
MA16	3	A15			
	2	A16			
	1	VPP			
	24	OE			
	22	CE			
	31	PGM			

271001/1000 IC 53

MA1	12	A0	D0	13	MD0
MA2	11	A1	D1	14	MD1
MA3	10	A2	D2	15	MD2
MA4	9	A3	D3	17	MD3
MA5	8	A4	D4	18	MD4
MA6	7	A5	D5	19	MD5
MA7	6	A6	D6	20	MD6
MA8	5	A7	D7	21	MD7
MA9	27	A8			
MA10	26	A9			
MA11	23	A10			
MA12	25	A11			
MA13	4	A12			
MA14	28	A13			
MA15	29	A14			
MA16	3	A15			
	2	A16			
	1	VPP			
	24	OE			
	22	CE			
	31	PGM			

uPD43256 IC 51

MA1	10	A0	O0	11	MD0
MA2	9	A1	O1	12	MD1
MA3	8	A2	O2	13	MD2
MA4	7	A3	O3	15	MD3
MA5	6	A4	O4	16	MD4
MA6	5	A5	O5	17	MD5
MA7	4	A6	O6	18	MD6
MA8	3	A7	O7	19	MD7
MA9	25	A8			
MA10	24	A9			
MA11	21	A10			
MA12	23	A11			
MA13	2	A12			
MA14	26	A13			
MA15	1	A14			
	27	WE			
	22	OE			
	20	CS			

/MRAMCSL

LS32 IC 33

/MLDS 4
MR/W 5
6

271001/1000 IC 59

MA1	12	A0	D0	13	MD8
MA2	11	A1	D1	14	MD9
MA3	10	A2	D2	15	MD10
MA4	9	A3	D3	17	MD11
MA5	8	A4	D4	18	MD12
MA6	7	A5	D5	19	MD13
MA7	6	A6	D6	20	MD14
MA8	5	A7	D7	21	MD15
MA9	27	A8			
MA10	26	A9			
MA11	23	A10			
MA12	25	A11			
MA13	4	A12			
MA14	28	A13			
MA15	29	A14			
MA16	3	A15			
	2	A16			
	1	VPP			
	24	OE			
	22	CE			
	31	PGM			

MA17

JP 5
1
2 5
3 4

/MROMOE0
(1-D3)

271001/1000 IC 54

MA1	12	A0	D0	13	MD8
MA2	11	A1	D1	14	MD9
MA3	10	A2	D2	15	MD10
MA4	9	A3	D3	17	MD11
MA5	8	A4	D4	18	MD12
MA6	7	A5	D5	19	MD13
MA7	6	A6	D6	20	MD14
MA8	5	A7	D7	21	MD15
MA9	27	A8			
MA10	26	A9			
MA11	23	A10			
MA12	25	A11			
MA13	4	A12			
MA14	28	A13			
MA15	29	A14			
MA16	3	A15			
	2	A16			
	1	VPP			
	24	OE			
	22	CE			
	31	PGM			

MA17

JP 4
1
2 5
3 4

/MROMOE1
(1-D3)

uPD43256 IC 52

MA1	10	A0	O0	11	MD8
MA2	9	A1	O1	12	MD9
MA3	8	A2	O2	13	MD10
MA4	7	A3	O3	15	MD11
MA5	6	A4	O4	16	MD12
MA6	5	A5	O5	17	MD13
MA7	4	A6	O6	18	MD14
MA8	3	A7	O7	19	MD15
MA9	25	A8			
MA10	24	A9			
MA11	21	A10			
MA12	23	A11			
MA13	2	A12			
MA14	26	A13			
MA15	1	A14			
	27	WE			
	22	OE			
	20	CS			

/MRAMCSU

LS32 IC 33

/MUDS 9
MR/W 10
8

MD-BUS

(1-6B)

DRAWN '89.6.2	TAITO CORPORATION		
DESIGN K. Moriyama	NAME CPU P.C.B		
CHECK K.Morita	SCHEMATIC DIAGRAM		
APPROVED	SIZE A3	CODE ナイトストライカー	DWG. NO. W5100330A
APPROVED	SCALE 1 / 1	RELEASE DATE	SHEET 2/26

REVISIONS			
LTR	DESCRIPTION	DATE	APPROVED

(4-1D) SCHA-BUS

SCHD-BUS (4-1D)

(1-5A) MA-BUS

(1-6B) MD-BUS

TC0100SCN

160PIN FLAT

*** +5V **********
20,40,60,80,100,120,140,160

*** GND **********
1,10,30,41,50,59,70,81,90
110,121,130,139,150

IC 39

/SCNCS (1-D3)

MR/W 3

(4-4D) SNA-BUS

(4-2B) SND-BUS

SCB-BUS (5-7D)

FCK 153 ← 13MH (4-6D)

OVCK 65

TES0 155 ← +5V

TES1 154

DACK 42 → SCNDTA (1-5C)

HSYN 45 → /H-SYNC (8-2B)

HBLO 46 → /H-BL (5-1B)

VSYN 43 → /V-SYNC (5-1B)

VBLO 44 → (13-7B)

OLDH 143

OLDU 148

IHLD 156

IVLD 157

+5V

LS74 IC 36

/V-BL (14-6C) (5-1B)

V-BL (1-3C) (6-2C)

/PRES (14-5D)

F74 IC 40

/SRWE (4-5A)

F244 IC 41

VDCK0 (F-CN)
VDCK1 (F-CN)
VDCK2 (F-CN)
VDCK0* (F-CN)
/H-SYNC* (F-CN) (13-7B)
/HLD* (F-CN)
/VLD* (F-CN)

(5-1B) (5-7B) (8-2B)

(4-5B) WEUP
(4-4C) WELO
(4-5B) SCE0

DRAWN	'89.6.2
DESIGN	K. Moriyama
CHECK	K Moriya
APPROVED	
APPROVED	

TAITO CORPORATION

NAME CPU P.C.B

SCHEMATIC DIAGRAM

SIZE	CODE	DWG. NO.
A3	ナイトストライカー	W5100330A

SCALE	RELEASE DATE	SHEET
1 / 1		3 / 26

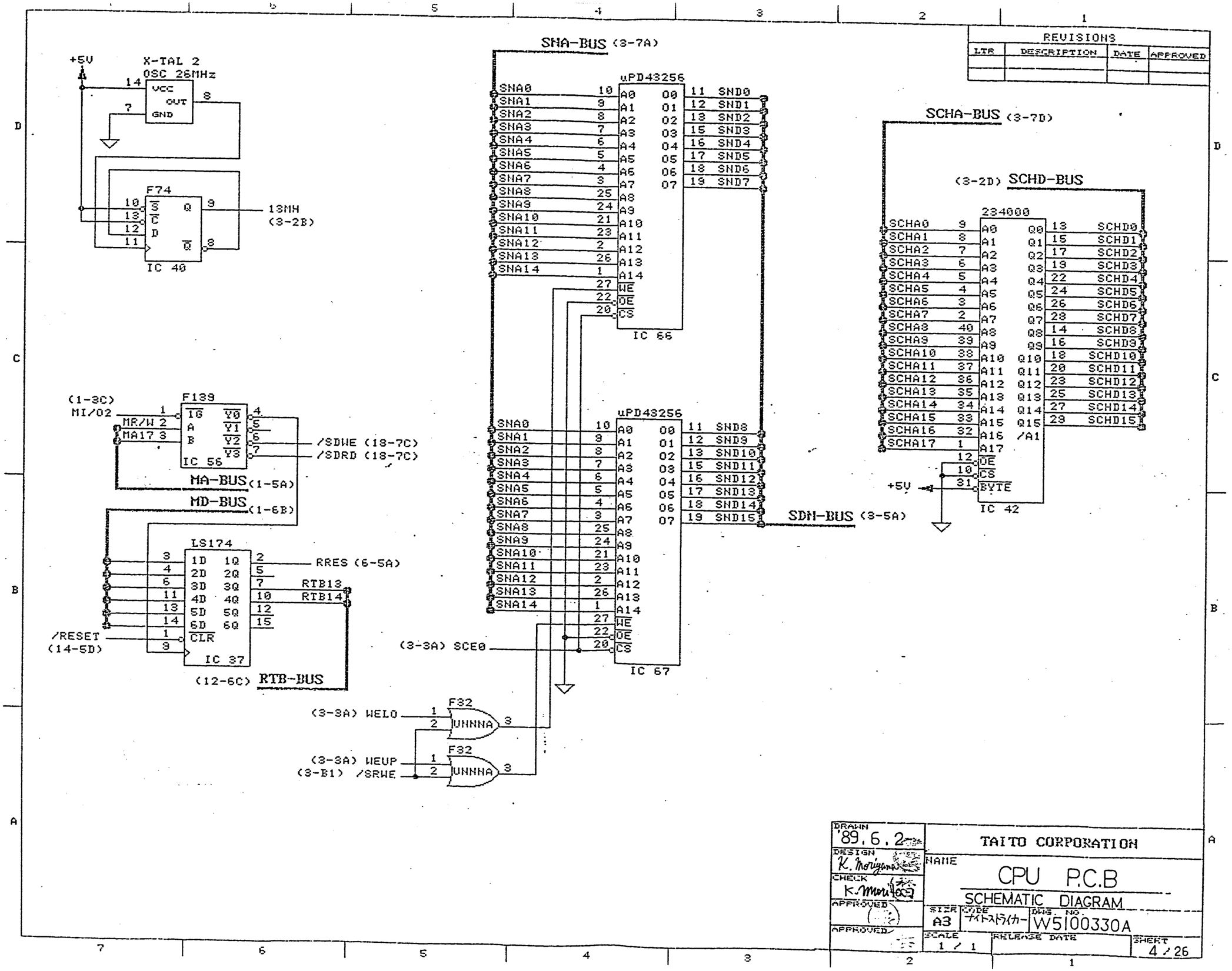

REVISIONS
LTR
DESCRIPTION
DATE
APPROVED
SNA-BUS (3-7A)
uPD43256
IC 66
IC 67
SCHA-BUS (3-7D)
(3-2D) SCHD-BUS
234000
IC 42
SDN-BUS (3-5A)
X-TAL 2
OSC 26MHz
F74
IC 40
13MH
(3-2B)
F139
IC 56
(1-3C)
MI/O2
MR/W
MA17
/SDWE (18-7C)
/SDRD (18-7C)
MA-BUS (1-5A)
MD-BUS (1-6B)
LS174
IC 37
RRES (6-5A)
RTB13
RTB14
/RESET
(14-5D)
(12-6C) RTB-BUS
(3-3A) SCE0
F32
UNNNA
(3-3A) WELO
(3-3A) WEUP
(3-B1) /SRWE
DRAWN
'89.6.2
DESIGN
K. Moriyama
CHECK
K. Moriyama
APPROVED
TAITO CORPORATION
NAME
CPU P.C.B
SCHEMATIC DIAGRAM
SIZE
A3
CODE
ナイトストライカー
DWG. NO.
W5100330A
SCALE
1 / 1
RELEASE DATE
SHEET
4 / 26

REVISIONS			
LTR	DESCRIPTION	DATE	APPROVED

(3-2C) SCB-BUS

SCB0 SCB1 SCB2 SCB3 SCB4 SCB5 SCB6 SCB7 SCB8 SCB9 SCB10 SCB11 SCB12 SCB13 SCB14

96 95 94 93 92 91 90 89 88 87 86 85 84 83 82 81

(1-6B) MD-BUS

(1-5A) MA-BUS

MD0	8	D0	SCC0
MD1	9	D1	SCC1
MD2	10	D2	SCC2
MD3	11	D3	SCC3
MD4	12	D4	SCC4
MD5	13	D5	SCC5
MD6	14	D6	SCC6
MD7	16	D7	SCC7
MD8	17	D8	SCC8
MD9	18	D9	SCC9
MD10	19	D10	SCC10
MD11	20	D11	SCC11
MD12	21	D12	SCC12
MD13	22	D13	SCC13
MD14	23	D14	SCC14
MD15	24	D15	
MA1	5	VA1	
MA2	6	VA2	
MR/W	100	NR/W	
/MLDS	1	LDS	
/MUDS	2	UDS	
	25	DACK	
(1-3C) CL	99	SCE	
	97	NHSV	
	98	NVSY	
VDCK0* (3-1B)	7	FCK	

TC0110PCR

100PIN FLAT

*** +5V **********
3,28,53,78

*** GND **********
4,15,29,40,54,65
79,90

IC 62

CA0	48	0	0
CA1	49	1	1
CA2	50	2	2
CA3	51	3	3
CA4	52	4	4
CA5	55	5	5
CA6	56	6	6
CA7	57	7	7
CA8	58	8	8
CA9	59	9	9
CA10	60	10	10
CA11	61	11	11
CA12	62		
CD0	31	0	
CD1	32	1	
CD2	33	2	
CD3	34	3	
CD4	35	4	
CD5	36	5	
CD6	37	6	
CD7	38	7	
CD8	39	8	
CD9	41	9	
CD10	42	10	
CD11	43	11	
CD12	44	12	
CD13	45	13	
CD14	46	14	
CD15	47	15	
WEH	26		
WEL	27		

+5V

8464-80

0	10	A0	01
1	9	A1	02
2	8	A2	03
3	7	A3	04
4	6	A4	05
5	5	A5	06
6	4	A6	07
7	3	A7	08
8	25	A8	
9	24	A9	
10	21	A10	
11	23	A11	
	2	A12	
	22	OE	
	27	WE	
	20	CS	
	26	CS	

IC68

8464-80

0	10	A0	01
1	9	A1	02
2	8	A2	03
3	7	A3	04
4	6	A4	05
5	5	A5	06
6	4	A6	07
7	3	A7	08
8	25	A8	
9	24	A9	
10	21	A10	
11	23	A11	
	2	A12	
	22	OE	
	27	WE	
	20	CS	
	26	CS	

IC69

TC0070RGB

11	0	10	3
12	1	11	4
13	2	12	5
15	3	13	6
16	4	14	7
17	5	5	8
18	6	6	9
19	7	7	10
		8	11
		9	12
		0	13
		1	14
		2	15
		3	16
		4	17

VCC
1,23

GND
18,28

IC 63

25	R (13-5B)
26	G (13-5B)
27	B (13-5B)

19	VDCK0* (3-1B)
20	/V-BL (3-1C)
21	/H-BL (3-2B)

(12-1A) CRY-BUS

CRV1 CRV2 CRV3 CRV4 CRV5 CRV6 CRV7 CRV8 CRV9 CRV10 CRV11 CRV12 CRV13 CRV14

88 77 76 75 74 73 72 71 70 69 68 67 66 64 63

BB0	BB1	BB2	BB3	BB4	BB5	BB6	BB7	BB8	BB9	BB10	BB11	BB12	BB13	BB14	

0	1	2	3	4	5	6	7	8	9	10	11	12	13	14	

BC0	BC1	BC2	BC3	BC4	BC5	BC6	BC7	BC8	BC9	BC10	BC11	BC12	BC13	BC14	

0	1	2	3	4	5	6	7	8	9	10	11	12	13	14	

DRAWN	'89.6.2	TAITO CORPORATION	
DESIGN	K. Moriyama	NAME	CPU P.C.B
CHECK	K Moriyama		SCHEMATIC DIAGRAM
APPROVED		SIZE A3	CODE ナイトストライカー DWG. NO. W5100330A
APPROVED		SCALE 1 / 1	RELEASE DATE
			SHEET 5 / 26

REVISIONS			
LTR	DESCRIPTION	DATE	APPROVED

RA-BUS (7-7D)(8-7D)(10-1C)

12MH (9-2B)

68000-12 IC12

15	CLK	A01	29	RA1
20	E	A02	30	RA2
18	RESET	A03	31	RA3
		A04	32	RA4
		A05	33	RA5
/RAS	6 AS	A06	34	RA6
/RUDS	7 UDS	A07	35	RA7
/RLDS	8 LDS	A08	36	RA8
	10 DTACK	A09	37	RA9
	19 VMA	A10	38	RA10
	21 VPA	A11	39	RA11
		A12	40	RA12
+5V	13 BR	A13	41	RA13
	12 BGACK	A14	42	RA14
	11 BG	A15	43	RA15
	17 HALT	A16	44	RA16
	22 BERR	A17	45	RA17
		A18	46	RA18
	25 IPL0	A19	47	RA19
	24 IPL1	A20	48	RA20
	23 IPL2	A21	50	RA21
		A22	51	RA22
RFC0	28 FC0	A23	52	RA23
RFC1	27 FC1	D00	5	RD0
RFC2	26 FC2	D01	4	RD1
		D02	3	RD2
		D03	2	RD3
		D04	1	RD4
		D05	64	RD5
		D06	63	RD6
		D07	62	RD7
		D08	61	RD8
		D09	60	RD9
		D10	59	RD10
		D11	58	RD11
		D12	57	RD12
		D13	56	RD13
		D14	55	RD14
		D15	54	RD15
		R/ W	9	RR/W

20LSB IC 14

RR/W	23	22	/RRAMCS (7-4A)
/RFC7	1	21	/RROMOE (7-7A)
RA16	2	20	/RRAMCSL (7-4C)
RA15	3	19	/RRAMCSU (7-4A)
RA23	4	18	/RTRAMCS (8-6B)
RA22	5	17	/RCOMCS (10-2B)
RA21	6	16	
RA20	7	15	
RA19	8		
RA18	9		
RA17	10		
/RAS	11		
/RUDS	13		
/RLDS	14		

VCC 24PIN GND 12PIN 300 MIL

18P8B IC 15

/RFC7	1	19	
RA23	2	18	RTDTA (8-6B)
RA22	3	17	RCOMDTA (10-2B)
RA21	4	16	(3-1C) V-BL
RA20	5	15	
RA19	6	14	
RA18	7	13	
RA17	8	12	
/RAS	9		
/RUDS	11		
/RLDS			
RR/W			
/RFC7			

LS10 IC 32

RFC0	5	
RFC1	4	
RFC2	3	6

+5V

LS74 IC 13

	10 S	Q	9
	13 C		
	12 D		
	11	Q	8

RD-BUS (7-3A)(8-7C)(10-1C)(11-1C)

+5V

RB1 1KΩ

RB1 1KΩ

LS07 IC 31

2		1
4		3

RRES (4-6B)

DRAWN	'89.6.2
DESIGN	K. Moriyama
CHECK	K Moriyama
APPROVED	
APPROVED	

TAITO CORPORATION

NAME CPU P.C.B

SCHEMATIC DIAGRAM

SIZE	CODE	DWG. NO.
A3	ナイトストライカー	W5100330A

SCALE	RELEASE DATE	SHEET
1 / 1		6 / 26

REVISIONS			
LTR	DESCRIPTION	DATE	APPROVED

RA-BUS
(6-3D)

271001/1000 IC 19

RA1	12	A0	D0	13	RD0
RA2	11	A1	D1	14	RD1
RA3	10	A2	D2	15	RD2
RA4	9	A3	D3	17	RD3
RA5	8	A4	D4	18	RD4
RA6	7	A5	D5	19	RD5
RA7	6	A6	D6	20	RD6
RA8	5	A7	D7	21	RD7
RA9	27	A8			
RA10	26	A9			
RA11	23	A10			
RA12	25	A11			
RA13	4	A12			
RA14	28	A13			
RA15	29	A14			
RA16	3	A15			
	2	A16			
	1	VPP			
	24	OE			
	22	CE			
	31	PGM			

271001/1000 IC 16

RA1	12	A0	D0	13	RD8
RA2	11	A1	D1	14	RD9
RA3	10	A2	D2	15	RD10
RA4	9	A3	D3	17	RD11
RA5	8	A4	D4	18	RD12
RA6	7	A5	D5	19	RD13
RA7	6	A6	D6	20	RD14
RA8	5	A7	D7	21	RD15
RA9	27	A8			
RA10	26	A9			
RA11	23	A10			
RA12	25	A11			
RA13	4	A12			
RA14	28	A13			
RA15	29	A14			
RA16	3	A15			
	2	A16			
	1	VPP			
	24	OE			
	22	CE			
	31	PGM			

RA17

JP 1: 1–2, 3–4, 5

/RROMOE (6-3D)

+5V

S464-100 IC 20

RA1	10	A0	01	11	RD0
RA2	9	A1	02	12	RD1
RA3	8	A2	03	13	RD2
RA4	7	A3	04	15	RD3
RA5	6	A4	05	16	RD4
RA6	5	A5	06	17	RD5
RA7	4	A6	07	18	RD6
RA8	3	A7	08	19	RD7
RA9	25	A8			
RA10	24	A9			
RA11	21	A10			
RA12	23	A11			
RA13	2	A12			
	22	OE			
	27	WE			
	20	CS			
	26	CS			

/RRAMCSL (6-3D)

S464-100 IC 18

RA1	10	A0	01	11	RD8
RA2	9	A1	02	12	RD9
RA3	8	A2	03	13	RD10
RA4	7	A3	04	15	RD11
RA5	6	A4	05	16	RD12
RA6	5	A5	06	17	RD13
RA7	4	A6	07	18	RD14
RA8	3	A7	08	19	RD15
RA9	25	A8			
RA10	24	A9			
RA11	21	A10			
RA12	23	A11			
RA13	2	A12			
	22	OE			
	27	WE			
	20	CS			
	26	CS			

/RRAMCSU (6-3D)
/RRAMCS (6-3D)

RD-BUS (6-6B)

DRAWN '89.6.2	TAITO CORPORATION		
DESIGN K. Moriyama	NAME CPU P.C.B		
CHECK K. Morikawa	SCHEMATIC DIAGRAM		
APPROVED	SIZE A3	CODE ナイトストライカー	DWG. NO. W5100330A
APPROVED	SCALE 1 / 1	RELEASE DATE	SHEET 7 / 26

REVISIONS			
LTR	DESCRIPTION	DATE	APPROVED

TC0150ROD

IC 17

(9-5D) RCHA-BUS

(9-3D) RCHD-BUS

(6-3D) RA-BUS

(6-6B) RD-BUS

(6-3D) /RTRAMCS

(6-3C) /RTDTA

(9-6D) RTA-BUS

RTD-BUS (9-4D)

PRA-BUS (9-3D)

PRD-BUS (9-2D)

RTB-BUS (12-6C)

+5V

20,40,60,80,100,120,140,160

GND

1,10,30,41,50,59,70,90,110,130,139,150

RA1	7	A1	
RA2	8	A2	
RA3	9	A3	
RA4	11	A4	
RA5	12	A5	
RA6	13	A6	
RA7	14	A7	
RA8	15	A8	
RA9	16	A9	
RA10	17	A10	
RA11	18	A11	
RA12	19	A12	
RD0	142	D0	
RD1	143	D1	
RD2	144	D2	
RD3	145	D3	
RD4	146	D4	
RD5	147	D5	
RD6	148	D6	
RD7	149	D7	
RD8	152	D8	
RD9	153	D9	
RD10	154	D10	
RD11	155	D11	
RD12	156	D12	
RD13	157	D13	
RD14	158	D14	
RD15	159	D15	
/RR/W	5	R/W	
/RUDS	4	UDS	
/RLDS	3	LDS	
	2	RCS	
	6	RDTA	

RCHA0	66	A1	
RCHA1	67	A2	
RCHA2	68	A3	
RCHA3	69	A4	
RCHA4	71	A5	
RCHA5	72	A6	
RCHA6	73	A7	
RCHA7	74	A8	
RCHA8	76	A9	
RCHA9	77	A10	
RCHA10	78	A11	
RCHA11	79	A12	
RCHA12	82	A13	
RCHA13	83	A14	
RCHA14	84	A15	
RCHA15	85	A16	
RCHA16	86	A17	
RCHA17	87	A18	
RCHA18	88		
RCHA19	89		
RCHD0	92	D0	
RCHD1	93	D1	
RCHD2	94	D2	
RCHD3	95	D3	
RCHD4	96	D4	
RCHD5	97	D5	
RCHD6	98	D6	
RCHD7	99	D7	
RCHD8	101	D8	
RCHD9	102	D9	
RCHD10	103	D10	
RCHD11	104	D11	
RCHD12	105	D12	
RCHD13	106	D13	
RCHD14	107	D14	
RCHD15	108	D15	

PRA0	131	PRA0	
PRA1	132	PRA1	
PRA2	133	PRA2	
PRA3	134	PRA3	
PRA4	135	PRA4	
PRA5	136	PRA5	
PRA6	137	PRA6	
PRA7	138	PRA7	
PRD0	126	PRD0	
PRD1	127	PRD1	
PRD2	128	PRD2	
PRD3	129	PRD3	
OUT1	111	RTB0	
OUT2	112	RTB1	
OUT3	113	RTB2	
OUT4	114	RTB3	
OUT5	116	RTB4	
OUT6	117	RTB5	
OUT7	118	RTB6	
OUT8	119	RTB7	
OUT9	122	RTB8	
OUT10	123	RTB9	
OUT11	124	RTB10	
OUT12	125	RTB11	
OUT13	24	RTB12	
VLD	22	/V-SYNC (3-2B)	
HLD	21		
VCK	23	/H-SYNC (3-2B)	
HCK	141	VDCK0* (3-1B)	

RTA0	25	RTD0	46
RTA1	27	RTD1	47
RTA2	28	RTD2	48
RTA3	29	RTD3	49
RTA4	32	RTD4	51
RTA5	33	RTD5	52
RTA6	34	RTD6	53
RTA7	35	RTD7	54
RTA8	36	RTD8	55
RTA9	37	RTD9	56
RTA10	38	RTD10	57
RTA11	39	RTD11	58
		RTD12	61
		RTD13	62
		RTD14	63
		RTD15	64
		ROE	42
		RLDW	43
		RHDW	44

RHDW (9-6B)

RLDW (9-6C)

ROE (9-6B)

DRAWN	'89.6.2
DESIGN	K. Moriyama
CHECK	K. Moriyama
APPROVED	
APPROVED	

TAITO CORPORATION

NAME CPU P.C.B

SCHEMATIC DIAGRAM

SIZE	CODE	DWG. NO.
A3	ナイトストライカー	W5100330A

SCALE	RELEASE DATE	SHEET
1 / 1		8 / 26

REVISIONS			
LTR	DESCRIPTION	DATE	APPROVED

RTA-BUS (8-6A)

RTD-BUS (8-2A)

RCHA-BUS (8-6D)

RCHD-BUS (8-2D)

PRA-BUS (8-1D)

(8-1C) PRD-BUS

8464-80

IC 43

8464-100

IC 44

RLDW (8-3A)

RHDW (8-3A)

ROE (8-3A)

234000

IC 21

7611

IC 6

X-TAL 1
OSC 24MHz

ALS74

UNNNA

12MH (1-6D)(6-6D)(10-6D)(18-6C)

DRAWN	'89.6.2	TAITO CORPORATION	
DESIGN	R. Moriyama	NAME	CPU P.C.B
CHECK	K.Maeda		SCHEMATIC DIAGRAM
APPROVED		SIZE A3	CODE ナイトストライカー DWG. NO. W5100330A
APPROVED		SCALE 1/1	RELEASE DATE SHEET 9/26

REVISIONS			
LTR	DESCRIPTION	DATE	APPROVED

(9-2B) 12MH

/MSEL (11-4A)

/RSEL (11-3B)

TC0170ABT

120PIN FLAT

*** +5V **********
16,46,60,76,106,120
*** GND **********
1,11,21,31,41,51,61,71,81
91,101,111

IC 11

MA-BUS (1-5A)

/MUDS	56	AA0
MA1	57	AA1
MA2	58	AA2
MA3	59	AA3
MA4	63	AA4
MA5	64	AA5
MA6	65	AA6
MA7	66	AA7
MA8	74	AA8
MA9	75	AA9
MA10	77	AA10
MA11	78	AA11
MA12	86	AA12
MA13	87	AA13
	88	AA14
	89	AA15

MD-BUS (1-6B)

MD0	37	AD0
MD1	38	AD1
MD2	54	AD2
MD3	55	AD3
MD4	67	AD4
MD5	68	AD5
MD6	84	AD6
MD7	85	AD7

(1-3D)

/MCOMCS	94	ACS
MR/W	45	AWR
	44	ARD
(1-5B) /MCOMDTA	90	AWAIT
	62	AINT
/MLDS	48	ALDS
+5V	103	AMZ

100	CLK	
92	ASEL	
93	BSEL	
96	REQ	
99	ACK	
98	EXTREQ	
97	EXTACK	

BA0	117	/RUDS
BA1	118	RA1
BA2	119	RA2
BA3	2	RA3
BA4	3	RA4
BA5	4	RA5
BA6	5	RA6
BA7	6	RA7
BA8	27	RA8
BA9	28	RA9
BA10	29	RA10
BA11	30	RA11
BA12	33	RA12
BA13	34	RA13
BA14	35	
BA15	36	

RA-BUS (6-3D)

BD0	107	RD0
BD1	108	RD1
BD2	114	RD2
BD3	115	RD3
BD4	7	RD4
BD5	8	RD5
BD6	24	RD6
BD7	25	RD7

RD-BUS (6-6B)

(6-3D)

BCS	95	/RCOMCS
BWR	15	RR/W
BRD	14	
BWAIT	18	(6-3C) /RCOMDT
BINT	32	
BLDS	26	/RLDS
BMZ	102	

16 46 60 76 106

31 71 61 51 41 31 21 11 1

+5V

AA0 AA1 AA2 AA3 AA4 AA5 AA6 AA7 AA8 AA9 AA10 AA11 AA12 AA13 AA14 AA15 (0 1 2 3 4 5)

AD0 AD1 AD2 AD3 AD4 AD5 AD6 AD7

111 101 91

9	10	12	18	19	20	22	28	39	40	42	48	49	50	52	53
COMA1	COMA2	COMA3	COMA4	COMA5	COMA6	COMA7	COMA8	COMA9	COMA10	COMA11	COMA12	COMA13			

(11-7D) COM-ADDRESS-BUS

69	70	72	73	79	80	82	83
COMD0	COMD1	COMD2	COMD3	COMD4	COMD5	COMD6	COMD7

(11-6B) /ZUDS

(11-7D) COM DATA BUS

112	110	113	105	109	104
				/ZLDS (11-6C)	
	/ZR/W (11-4A)(11-3B)(11-6B)(11-6C)				
/ZCS (11-6B)(11-6C)					

DRAWN	'89.6.2
DESIGN	N. Moriyama
CHECK	K. Morita
APPROVED	
APPROVED	

TAITO CORPORATION

NAME CPU P.C.B

SCHEMATIC DIAGRAM

SIZE	CODE	DWG. NO.
A3	ナイトストライカー	W5100330A

SCALE	RELEASE DATE	SHEET
1 / 1		10 / 26

REVISIONS			
LTR	DESCRIPTION	DATE	APPROVED

COM-ADDRESS-BUS (10-7A)

COMA1 COMA2 COMA3 COMA4 COMA5 COMA6 COMA7 COMA8 COMA9 COMA10 COMA11 COMA12 COMA13

+5V

8464-80 IC 10

A0 A1 A2 A3 A4 A5 A6 A7 A8 A9 A10 A11 A12 /OE /WE /CS CS

COMD0 COMD1 COMD2 COMD3 COMD4 COMD5 COMD6 COMD7

COM-DATA-BUS (10-5A)

(10-3A) /ZCS

(10-3A) /ZR/W

(10-3A) /ZLDS

LS32 IC 33

(10-3A)

8464-80 IC 9

COMA1 COMA2 COMA3 COMA4 COMA5 COMA6 COMA7 COMA8 COMA9 COMA10 COMA11 COMA12 COMA13

A0 A1 A2 A3 A4 A5 A6 A7 A8 A9 A10 A11 A12 /OE /WE /CS CS

(10-3A) /ZCS

(10-3A) /ZR/W

(10-6A) /ZUDS

LS32 IC 33

LS245 IC 7

A1 A2 A3 A4 A5 A6 A7 A8 DIR /G

B1 B2 B3 B4 B5 B6 B7 B8

(10-3A) /ZR/W

(10-5D) /RSEL

RD8 RD9 RD10 RD11 RD12 RD13 RD14 RD15

RD-BUS (6-6B)

(1-6B) MD-BUS

MD15 MD14 MD13 MD12 MD11 MD10 MD9 MD8

LS245 IC 8

B1 B2 B3 B4 B5 B6 B7 B8 DIR /G

A1 A2 A3 A4 A5 A6 A7 A8

/ZR/W (10-3A)

/MSEL (10-5D)

DRAWN	'89.6.2
DESIGN	K. Moriyama
CHECK	K Moriyama
APPROVED	
APPROVED	

TAITO CORPORATION

NAME CPU P.C.B

SCHEMATIC DIAGRAM

SIZE	CODE	DWG. NO.
A3	ナイトストライカー	W5100330A

SCALE	RELEASE DATE	SHEET
1 / 1		11 / 26

REVISIONS			
LTR	DESCRIPTION	DATE	APPROVED

OBB0 1
OBB1 2
OBB2 3
OBB3 12
13
LS260
IC 27
5
OBB12

5 A1 Q1 12
6 A2 Q2 11
RTB8 7 A3 Q3 10 CRV13
RTB9 4 A4 Q4 9 CRV14
RTB10 3 A5
RTB11 2 A6
RTB12 1 A7
15 A8
13 S1
14 S2
7611
IC 23

OBB-BUS (FCN)

(4-6B)(8-1B) RTB-BUS

LS157

OBB0 2 1A 1Y 4 CRV1
RTB0 3 1B
OBB1 5 2A 2Y 7 CRV2
RTB1 6 2B
OBB2 11 3A 3Y 9 CRV3
10 3B
OBB3 14 4A 4Y 12 CRV4
13 4B
1 SEL
15 G
IC 26

LS157

OBB4 2 1A 1Y 4 CRV5
RTB2 3 1B
OBB5 5 2A 2Y 7 CRV6
RTB3 6 2B
OBB6 11 3A 3Y 9 CRV7
RTB4 10 3B
OBB7 14 4A 4Y 12 CRV8
RTB5 13 4B
1 SEL
15 G
IC 25

LS157

OBB8 2 1A 1Y 4 CRV9
RTB6 3 1B
OBB9 5 2A 2Y 7 CRV10
RTB7 6 2B
OBB10 11 3A 3Y 9 CRV11
RTB13 10 3B
OBB11 14 4A 4Y 12 CRV12 CRY-BUS
RTB14 13 4B (5-7A)
1 SEL
15 G
IC 24

DRAWN '89.6.2	TAITO CORPORATION	
DESIGN K. Moriyama	NAME CPU P.C.B	
CHECK K. Morita	SCHEMATIC DIAGRAM	
APPROVED	SIZE A3 / CODE ナイトストライカー / DWG. NO. W5100330A	
APPROVED	SCALE 1 / 1 / RELEASE DATE	SHEET 12 / 26

REVISIONS			
LTR	DESCRIPTION	DATE	APPROVED

MA-BUS (1-5A)

LS244 IC 3

MA1 2 MA2 4 MA3 6 MA4 8 MA5 11 MA6 13 MA7 15 MA8 17 1 19

1A1 1V1 1A2 1V2 1A3 1V3 1A4 1V4 2A1 2V1 2A2 2V2 2A3 2V3 2A4 2V4 1G 2G

18 OA1 16 OA2 14 OA3 12 OA4 9 OA5 7 OA6 5 OA7 3 OA8

MR/W

LS244 IC 4

MA9 2 MA10 4 MR/W 6 /MUDS 8 /MLDS 11 13 15 17 1 19

1A1 1V1 1A2 1V2 1A3 1V3 1A4 1V4 2A1 2V1 2A2 2V2 2A3 2V3 2A4 2V4 1G 2G

18 OA9 16 OA10 14 OR/W 12 OUDS 9 OLDS 7 5 3

OA-BUS (ECN)

(1-6B) MD-BUS

LS04 IC 84

1 2

LS245

MD0 2 MD1 3 MD2 4 MD3 5 MD4 6 MD5 7 MD6 8 MD7 9 1 19

A1 A2 A3 A4 A5 A6 A7 A8 DIR G

B1 B2 B3 B4 B5 B6 B7 B8

18 OD0 17 OD1 16 OD2 15 OD3 14 OD4 13 OD5 12 OD6 11 OD7

UNNN

LS245

MD8 2 MD9 3 MD10 4 MD11 5 MD12 6 MD13 7 MD14 8 MD15 9 1 19

A1 A2 A3 A4 A5 A6 A7 A8 DIR G

B1 B2 B3 B4 B5 B6 B7 B8

18 OD8 17 OD9 16 OD10 15 OD11 14 OD12 13 OD13 12 OD14 11 OD15

UNNN

OD-BUS (ECN)

(1-3D) /OBJCS

(3-2B) /V-SYNC

LS86 IC 5

5 4 6

/H-SYNC* (3-1A)

LS04 IC 84

13 12

R 9 470Ω → +5V

R 8 100Ω

P L2 C138 N V-5 VIDEO-SYNC

(5-1D) R P L3 C139 N V-2 VIDEO-R

(5-1D) G P L4 C140 N V-3 VIDEO-G

(5-1C) B P L5 C141 N V-4 VIDEO-B

N V-1 VIDEO-GND

C138 - 141 = 180pf

DRAWN '89.6.2	TAITO CORPORATION		
DESIGN K. Moriyama	NAME CPU P.C.B		
CHECK K.Morita	SCHEMATIC DIAGRAM		
APPROVED	SIZE A3	CODE ライトストライカー	DWG. NO. W5100330A
APPROVED	SCALE 1 / 1	RELEASE DATE	SHEET 13 / 26

REVISIONS			
LTR	DESCRIPTION	DATE	APPROVED

+5V
C127 16V T10uF
3771 IC 80
/PRES(3-1C)(18-4D)
R40 2.2K
(1-5A)(4-7B)(16-6B) /RESET
JP 6
(3-1C) /V-BL
(1-5A) MA-BUS
MA1 MA2 MA3 MA4
MI/O1 (1-3C)
MR/W
(1-6B) MD-BUS
MD0 MD1 MD2 MD3 MD4 MD5 MD6 MD7
TC0220IOC
RES-IN
RES-OUT
RES-CLK-IN
A0 A1 A2 A3
CS WE OE
D0 D1 D2 D3 D4 D5 D6 D7
80PIN FLAT
VCC..... 23,24,39 40,53,64 79,80
GND..... 1,2,25 26,41,42 65,66
COIN-LOCK-A
COIN-LOCK-B
COINMETER-A
COINMETER-B
INB0 INB1 INB2 INB3 INB4 INB5 INB6 INB7
IN00 IN01 IN02 IN03 IN04 IN05 IN06 IN07 IN08 IN09 IN10 IN11 IN12 IN13 IN14 IN15 IN16 IN17 IN18 IN19 IN20 IN21 IN22 IN23 IN24 IN25 IN26 IN27 IN28 IN29 IN30 IN31
SHOT LAMP (15-7B)
START LAMP (15-7B)
TRIGER (15-7B)
MLAMP1 (15-7B)
MLAMP2 (15-7B)
MLAMP3 (15-7B)
SPOT1 (15-7B)
SPOT2 (15-7B)
IC 81
DIPSWA
DIPSWB
+5V
RRC1
L27 C160 G-T
L26 C159 G-16
L24 C157 G-R
L25 C158 G-S
G-17 G-U G-18 G-19 L28 C161 L29 C162 L30 C163 L31 C164
RRC2
G-20 G-21 G-22 G-23 L32 C165 L33 C166 L34 C167 L35 C168
RRC3
+12V
G-9 G-K G-8 G-J L23 C156 L22 C155 L21 C154 L20 C153
ID62064D
Q1 Q2 Q3 Q4 I1 I2 I3 I4
COM GND N.C GND
IC 78

DRAWN	'89.6.2	TAITO CORPORATION	
DESIGN	K. Moriyama	NAME	CPU P.C.B
CHECK	K.Mouri		SCHEMATIC DIAGRAM
APPROVED		SIZE A3	CODE ナイトストライカー DWG. NO. W5100330A
APPROVED		SCALE 1 / 1	RELEASE DATE SHEET 14 / 26

REVISIONS			
LTR	DESCRIPTION	DATE	APPROVED

+5V
4.7KΩ R 42
4.7KΩ R 43
4.7KΩ R 41
555 IC 85
LS04 IC 84
LS08 IC 83
+ C136 16V10u - TANT
P L40 C173 N G-X
Q 3 2SD633
P L38 C171 N G-U
Q 1 2SD1584
P L39 C172 N G-W
Q 2 2SD1584
LS07 IC 82
LS07 IC 31
RB 3 RB10KΩ
(14-3B) TRIGER
(14-3B) SHOT LAMP
START LAMP
(14-3B) MLAMP1
(14-3B) MLAMP2
(14-3B) MLAMP3
(14-3B) SPOT1
(14-3B) SPOT2
(14-3B)
RB470Ω RB 4
TLP521-3 PC 6
TLP521-4 PC 5
RB470Ω RB11
M-19
M-20
M-21
M-22
M-23

DRAWN	'89.6.2
DESIGN	K. Moriyama
CHECK	K. Moriyama
APPROVED	
APPROVED	

TAITO CORPORATION

NAME CPU P.C.B

SCHEMATIC DIAGRAM

SIZE	CODE	DWG. NO.
A3	ナイトストライカー	W5100330A

SCALE	RELEASE DATE	SHEET
1 / 1		15 / 26

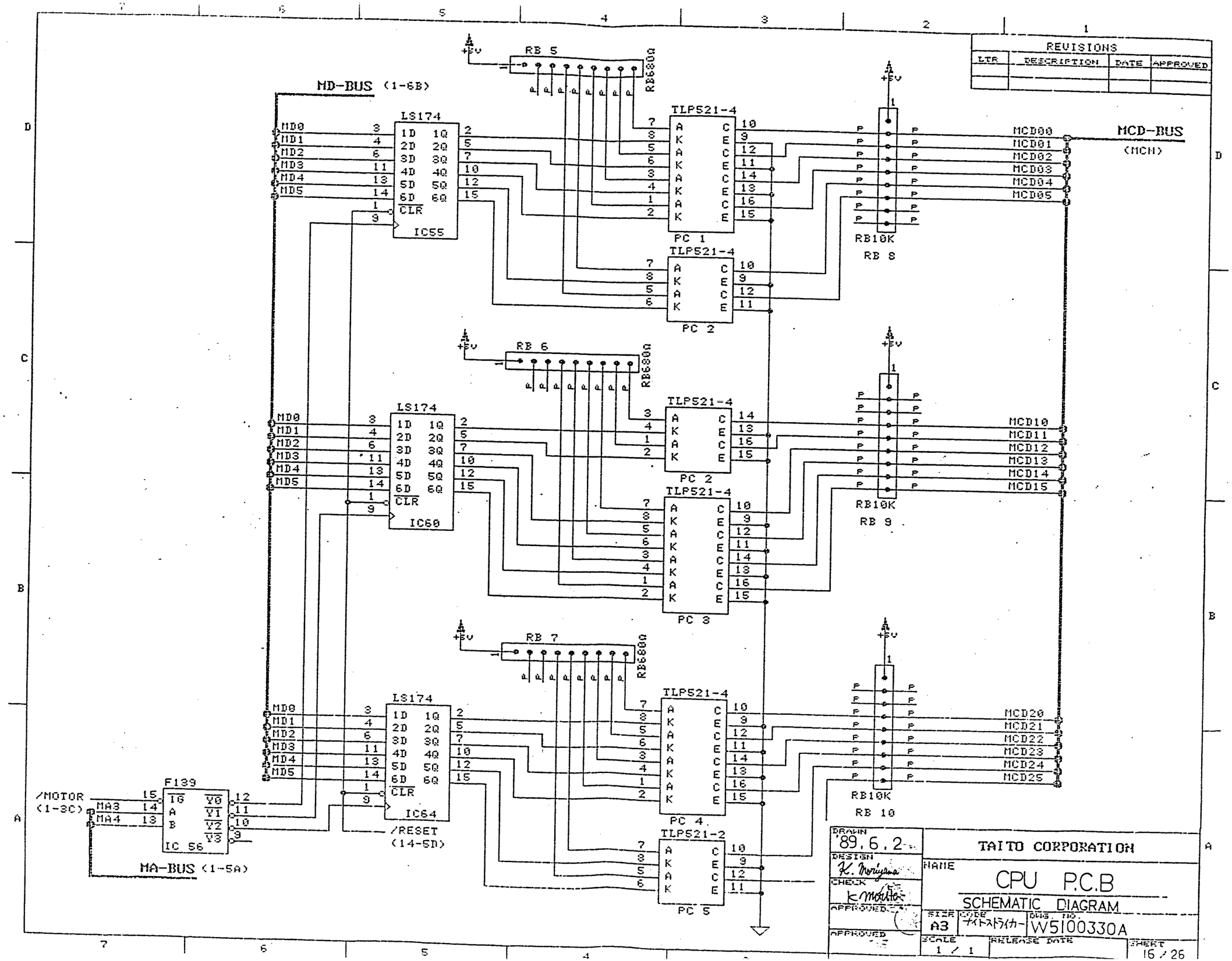

REVISIONS
LTR
DESCRIPTION
DATE
APPROVED
MD-BUS (1-6B)
MCD-BUS (MCN)
MA-BUS (1-5A)
/MOTOR (1-3C)
/RESET (14-5D)
LS174
IC55
IC60
IC64
F139
IC 56
TLP521-4
TLP521-2
PC 1
PC 2
PC 3
PC 4
PC 5
RB 5
RB 6
RB 7
RB 8
RB 9
RB 10
RB680Ω
RB10K
MCD00
MCD01
MCD02
MCD03
MCD04
MCD05
MCD10
MCD11
MCD12
MCD13
MCD14
MCD15
MCD20
MCD21
MCD22
MCD23
MCD24
MCD25
MD0
MD1
MD2
MD3
MD4
MD5
MA3
MA4
DRAWN '89.6.2
DESIGN K. Moriyama
CHECK K. Morita
APPROVED
TAITO CORPORATION
NAME
CPU P.C.B
SCHEMATIC DIAGRAM
SIZE A3
CODE ナイトストライカー
DWG. NO. W5100330A
SCALE 1 / 1
RELEASE DATE
SHEET 16 / 26

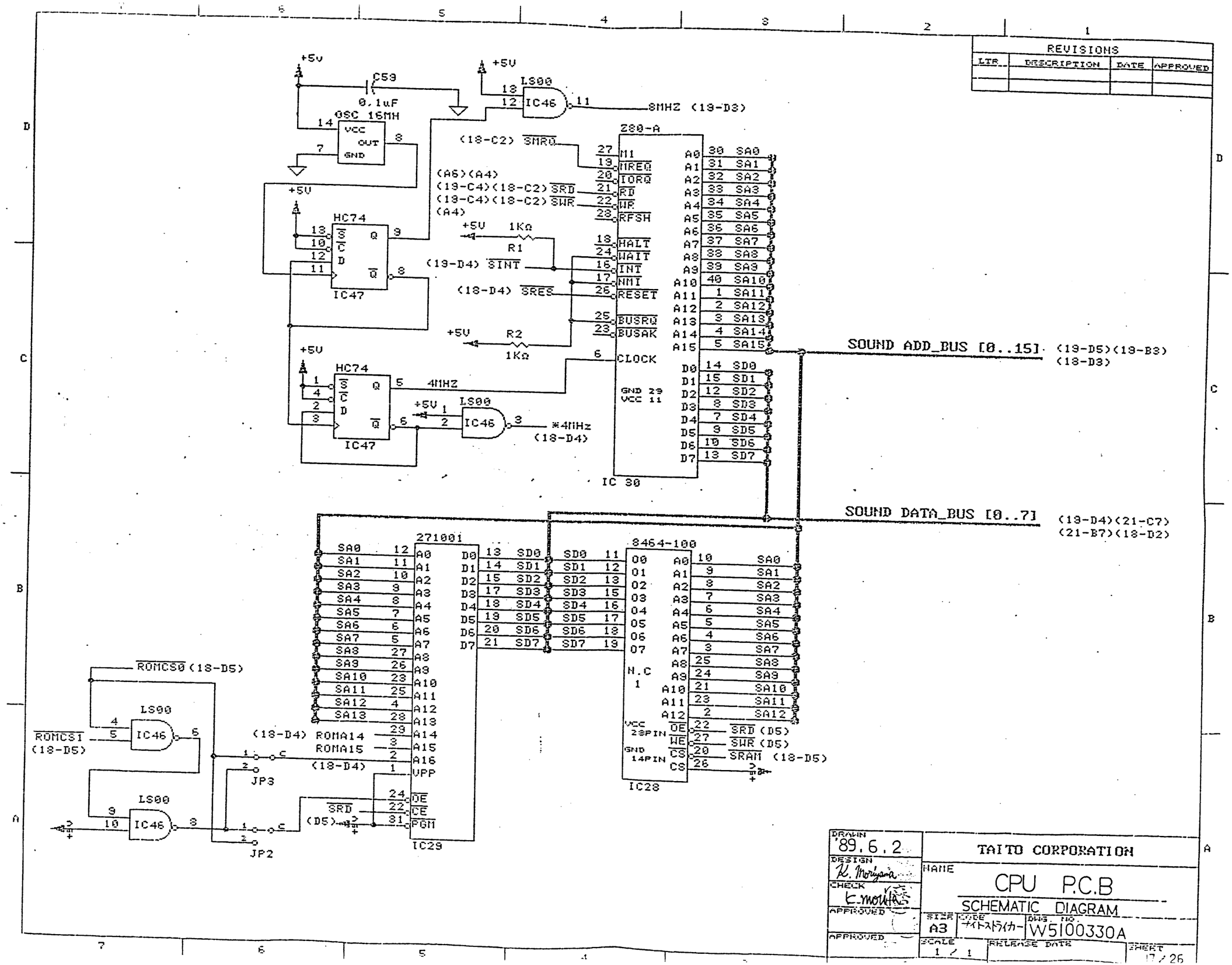

REVISIONS
LTR
DESCRIPTION
DATE
APPROVED
+5V
C59
0.1uF
OSC 16MH
VCC
OUT
GND
LS00
IC46
8MHZ (19-D3)
Z80-A
(18-C2) SMRQ
(A6)(A4)
(19-C4)(18-C2) SRD
(19-C4)(18-C2) SWR
(A4)
M1
MREQ
IORQ
RD
WR
RFSH
HALT
WAIT
INT
NMI
RESET
BUSRQ
BUSAK
CLOCK
GND 29
VCC 11
IC 30
HC74
IC47
1KΩ
R1
(19-D4) SINT
(18-D4) SRES
R2
1KΩ
4MHZ
*4MHz
(18-D4)
SOUND ADD_BUS [0..15]
(19-D5)(19-B3)
(18-D3)
SOUND DATA_BUS [0..7]
(19-D4)(21-C7)
(21-B7)(18-D2)
271001
IC29
8464-100
IC28
N.C
VCC 28PIN
GND 14PIN
SRD (D5)
SWR (D5)
SRAM (18-D5)
ROMCS0 (18-D5)
ROMCS1
(18-D5)
(18-D4) ROMA14
ROMA15
(18-D4)
JP3
JP2
SRD
(D5)
OE
CE
PGM
VPP
DRAWN
'89.6.2
DESIGN
K. Moriyama
CHECK
K. Morita
APPROVED
APPROVED
TAITO CORPORATION
NAME
CPU P.C.B
SCHEMATIC DIAGRAM
SIZE
A3
CODE
ナイトストライカー
DWG. NO.
W5100330A
SCALE
1 / 1
RELEASE DATE
SHEET
17 / 26

REVISIONS			
LTR	DESCRIPTION	DATE	APPROVED

/MUTE — G-P — N

/PRES (14-5D)

SOUND_ADD[0,9..15] (17-3C)

SOUND_DATA[0..3] (17-3B)

(1-6B) MD-BUS

MD0	2	MD0
MD1	3	MD1
MD2	4	MD2
MD3	5	MD3
(1-2D) MA1	6	MA0
(4-6C) SNDWE	7	MWR
(4-6C) SNDRD	8	MRD
	9	MCS
(9-2B) 12MH	10	MCK
*AA0	12	RA0
*AA1	13	RA1
*AA2	14	RA2
*AA3	15	RA3
*AA4	17	RA4
*AA5	18	RA5
*AA6	19	RA6
*AA7	20	RA7
*AA8	22	RA8
*AA9	23	RA9
*AA10	24	RA10
*AA11	25	RA11
*AA12	26	RA12
*AA13	27	RA13
*AA14	28	RA14
*AA15	29	RA15
*AA16	30	RA16

119	I/OC	(19-4C)
118	I/OA2	I/OA2 (19-6A)
117	I/OA1	I/OA1 (19-6A)
116	I/OA0	I/OA0 (19-6A)
115	CSB	(19-2B)
114	CSA	CSA (17-4A)
113	RAMCS	SRAM (17-7A)
112	ROMCS1	ROMCS1 (17-7B)
110	ROMCS0	ROMCS0 (17-6A)
109	ROMA15	ROMA15 (17-6A)
108	ROMA14	ROMA14 (17-6A)
107	ROUT	SNRES (17-5C) (19-4C)
105	SCK	*4MHz (17-5C)
104	RES	SA0
103	A0	SA9
102	A9	SA10
100	A10	SA11
99	A11	SA12
98	A12	SA13
97	A13	SA14
96	A14	SA15
95	A15	SD3
94	D3	SD2
93	D2	SD1
92	D1	

D0	90	SD0
MREQ	89	
RD	88	SMRQ (17-5D)
WR	87	SRD (17-5D)
OPX	86	SWR (17-5D)
VPA11	85	VBA11 OP_T (19-4C)
VPA10	84	VBA10
VPA9	83	VBA9
VPA8	82	VBA8
VPAD7	80	VBAD7
VPAD6	79	VBAD6
VPAD5	78	VBAD5
VPAD4	77	VBAD4
VPAD3	75	VBAD3
VPAD2	74	VBAD2
VPAD1	73	VBAD1
VPAD0	72	VBAD0 YBAD-BUS (19-1B)(20-6D)
VPMPX	70	BMPX (19-1C)
VRAD0	69	YAAD0
VRAD1	68	YAAD1
VRAD2	67	YAAD2
VRAD3	66	YAAD3
VRAD4	65	YAAD4
VRAD5	64	YAAD5
VRAD6	63	YAAD6
VRAD7	62	YAAD7 YAAD-BUS (19-1D)(20-2B)

TC0140SYT

GND 1.11.21.31.41.51.61
71.81.91.101.111

VCC 16.46.60.76.106.120

IC 45

RA17	32	*AA17
RA18	33	*AA18
RA19	34	*AA19
PA18	35	BA18
PA17	36	BA17
PA16	37	BA16
PA15	38	BA15
PA14	39	BA14
PA13	40	BA13
PA12	42	BA12
PA11	43	BA11
PA10	44	BA10
PA9	45	BA9
PA8	47	BA8
PA7	48	BA7
PA6	49	BA6
PA5	50	BA5
PA4	52	BA4
PA3	53	BA3
PA2	54	BA2
PA1	55	BA1
PA0	56	BA0
	57	
VRA9	58	YAA9
VRA8	59	YAA8

(20-7A) AA-BUS

(20-7D) BA-BUS

(19-1D) AMPX

DRAWN	'89.6.2
DESIGN	K. Morigawa
CHECK	K. Morigawa
APPROVED	
APPROVED	

TAITO CORPORATION

NAME CPU P.C.B

SCHEMATIC DIAGRAM

SIZE	CODE	DWG. NO.
A3	ナイトストライカー	W5100330A

SCALE — RELEASE DATE — SHEET

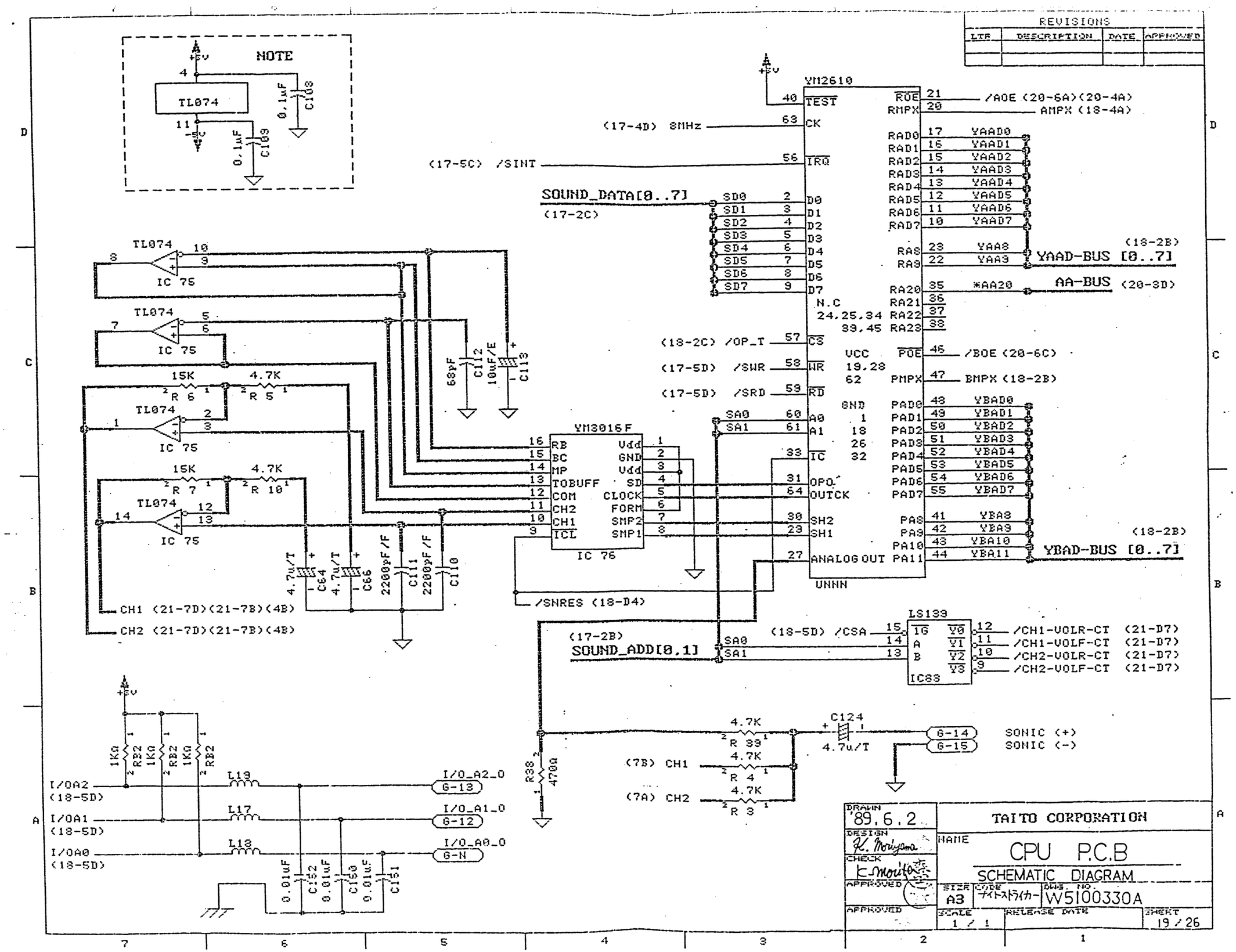
REVISIONS
LTR
DESCRIPTION
DATE
APPROVED
NOTE
TL074
0.1uF
C108
C109
YM2610
TEST
CK
IRQ
(17-4D) 8MHz
(17-5C) /SINT
SOUND_DATA[0..7]
(17-2C)
SD0
SD1
SD2
SD3
SD4
SD5
SD6
SD7
D0
D1
D2
D3
D4
D5
D6
D7
N.C
24,25,34
39,45
(18-2C) /OP_T
CS
(17-5D) /SWR
WR
(17-5D) /SRD
RD
SA0
SA1
A0
A1
IC
OPO
OUTCK
SH2
SH1
ANALOG OUT
UNNN
VCC
19,28
62
GND
1
18
26
32
ROE
RMPX
/AOE (20-6A)(20-4A)
AMPX (18-4A)
RAD0
RAD1
RAD2
RAD3
RAD4
RAD5
RAD6
RAD7
YAAD0
YAAD1
YAAD2
YAAD3
YAAD4
YAAD5
YAAD6
YAAD7
RA8
RA9
YAA8
YAA9
YAAD-BUS [0..7]
(18-2B)
RA20
RA21
RA22
RA23
*AA20
AA-BUS (20-3D)
POE
/BOE (20-6C)
PMPX
BMPX (18-2B)
PAD0
PAD1
PAD2
PAD3
PAD4
PAD5
PAD6
PAD7
YBAD0
YBAD1
YBAD2
YBAD3
YBAD4
YBAD5
YBAD6
YBAD7
PA8
PA9
PA10
PA11
YBA8
YBA9
YBA10
YBA11
YBAD-BUS [0..7]
(18-2B)
TL074
IC 75
15K
R 6
4.7K
R 5
R 7
R 10
68pF
C112
10uF/E
C113
YM3016F
RB
BC
MP
TOBUFF
COM
CH2
CH1
ICL
Vdd
GND
SD
CLOCK
FORM
SMP2
SMP1
IC 76
4.7u/T
C64
C66
2200pF/F
C111
C110
CH1 (21-7D)(21-7B)(4B)
CH2 (21-7D)(21-7B)(4B)
/SNRES (18-D4)
(17-2B)
SOUND_ADD[0,1]
SA0
SA1
(18-5D) /CSA
LS139
IG
A
B
Y0
Y1
Y2
Y3
IC83
/CH1-VOLR-CT (21-D7)
/CH1-VOLF-CT (21-D7)
/CH2-VOLR-CT (21-D7)
/CH2-VOLF-CT (21-D7)
1KΩ
RB2
I/OA2
(18-5D)
I/OA1
(18-5D)
I/OA0
(18-5D)
L19
L17
L18
I/O_A2_O
G-13
I/O_A1_O
G-12
I/O_A0_O
G-N
0.01uF
C152
C150
C151
R38
470Ω
4.7K
R 39
R 4
R 3
(7B) CH1
(7A) CH2
C124
4.7u/T
G-14
G-15
SONIC (+)
SONIC (-)
DRAWN
'89.6.2
DESIGN
K. Moriyama
CHECK
K. Morita
APPROVED
APPROVED
TAITO CORPORATION
NAME
CPU P.C.B
SCHEMATIC DIAGRAM
SIZE
A3
CODE
ナイトストライカー
DWG. NO.
W5100330A
SCALE
1 / 1
RELEASE DATE
SHEET
19 / 26

REVISIONS			
LTR	DESCRIPTION	DATE	APPROVED

(18-2B) YBAD-BUS

(18-6A) BA-BUS

234000

BA1	9	A0	Q0	13	YBAD0
BA2	8	A1	Q1	15	YBAD1
BA3	7	A2	Q2	17	YBAD2
BA4	6	A3	Q3	19	YBAD3
BA5	5	A4	Q4	22	YBAD4
BA6	4	A5	Q5	24	YBAD5
BA7	3	A6	Q6	26	YBAD6
BA8	2	A7	Q7	28	YBAD7
BA9	40	A8	Q8	14	
BA10	39	A9	Q9	16	
BA11	38	A10	Q10	18	
BA12	37	A11	Q11	20	
BA13	36	A12	Q12	23	
BA14	35	A13	Q13	25	
BA15	34	A14	Q14	27	
BA16	33	A15	Q15	29	
BA17	32	A16	/A1		
BA18	1	A17			
BOE	12	OE			
(18-1C)	10	CS			
	31	BYTE			

IC 50

BA0

LS139

	1	1G	0	4
*AA19	2	A	1	5
*AA20	3	B	2	6
			3	7

IC 79

AARON0 (7A)
AARON1 (7A)

234000

*AA1	9	A0	Q0	13	YAAD0
*AA2	8	A1	Q1	15	YAAD1
*AA3	7	A2	Q2	17	YAAD2
*AA4	6	A3	Q3	19	YAAD3
*AA5	5	A4	Q4	22	YAAD4
*AA6	4	A5	Q5	24	YAAD5
*AA7	3	A6	Q6	26	YAAD6
*AA8	2	A7	Q7	28	YAAD7
*AA9	40	A8	Q8	14	
*AA10	39	A9	Q9	16	
*AA11	38	A10	Q10	18	
*AA12	37	A11	Q11	20	
*AA13	36	A12	Q12	23	
*AA14	35	A13	Q13	25	
*AA15	34	A14	Q14	27	
*AA16	33	A15	Q15	29	
*AA17	32	A16	/A1		
*AA18	1	A17			
AOE	12	OE			
(19-2D) (1D) AARON0	10	CS			
	31	BYTE			

IC 49

*AA0

(18-7A) AA-BUS

234000

*AA1	9	A0	Q0	13	YAAD0
*AA2	8	A1	Q1	15	YAAD1
*AA3	7	A2	Q2	17	YAAD2
*AA4	6	A3	Q3	19	YAAD3
*AA5	5	A4	Q4	22	YAAD4
*AA6	4	A5	Q5	24	YAAD5
*AA7	3	A6	Q6	26	YAAD6
*AA8	2	A7	Q7	28	YAAD7
*AA9	40	A8	Q8	14	
*AA10	39	A9	Q9	16	
*AA11	38	A10	Q10	18	
*AA12	37	A11	Q11	20	
*AA13	36	A12	Q12	23	
*AA14	35	A13	Q13	25	
*AA15	34	A14	Q14	27	
*AA16	33	A15	Q15	29	
*AA17	32	A16	/A1		
*AA18	1	A17			
AOE	12	OE			
(19-2D) (1D) AARON1	10	CS			
	31	BYTE			

IC 43

*AA0

YAAD-BUS (18-2B)

DRAWN	'89.6.2	TAITO CORPORATION
DESIGN	K. Moriyasu	NAME CPU P.C.B
CHECK	K Moriyasu	SCHEMATIC DIAGRAM
APPROVED		SIZE A3 / CODE ナイトストライカー / DWG. NO. W5100330A
APPROVED		SCALE 1 / 1 / RELEASE DATE / SHEET 20 / 26

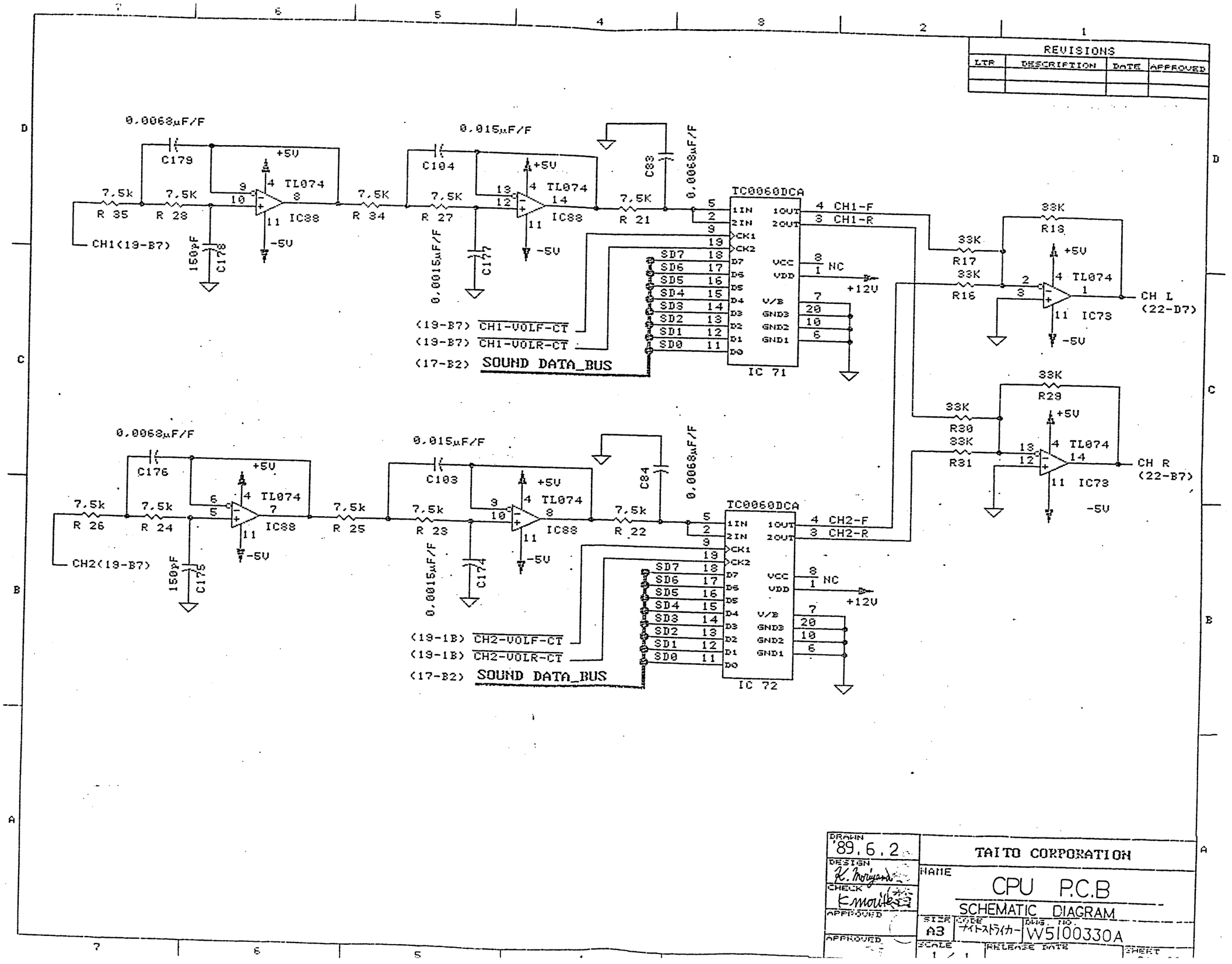

REVISIONS
LTR
DESCRIPTION
DATE
APPROVED
0.0068μF/F
C179
+5V
TL074
IC88
7.5k
R 35
R 28
CH1(19-B7)
150pF
C178
-5V
R 34
0.015μF/F
C104
R 27
0.0015μF/F
C177
C83
R 21
TC0060DCA
1IN
2IN
CK1
CK2
D7
D6
D5
D4
D3
D2
D1
D0
1OUT
2OUT
VCC
VDD
V/B
GND3
GND2
GND1
IC 71
CH1-F
CH1-R
NC
+12V
SD7
SD6
SD5
SD4
SD3
SD2
SD1
SD0
(19-B7) CH1-VOLF-CT
(19-B7) CH1-VOLR-CT
(17-B2) SOUND DATA_BUS
33K
R18
R17
R16
IC73
CH L
(22-D7)
R29
R30
R31
CH R
(22-B7)
C176
R 26
R 24
CH2(19-B7)
C175
R 25
0.015μF/F
C103
R 23
C174
C84
R 22
IC 72
CH2-F
CH2-R
(19-1B) CH2-VOLF-CT
(19-1B) CH2-VOLR-CT
(17-B2) SOUND DATA_BUS
DRAWN
'89.6.2
DESIGN
K. Moriyama
CHECK
K.Morita
APPROVED
APPROVED
TAITO CORPORATION
NAME
CPU P.C.B
SCHEMATIC DIAGRAM
SIZE
A3
CODE
ナイトストライカー
DWG. NO.
W5100330A
SCALE
1 / 1
RELEASE DATE
SHEET

REVISIONS			
LTR	DESCRIPTION	DATE	APPROVED

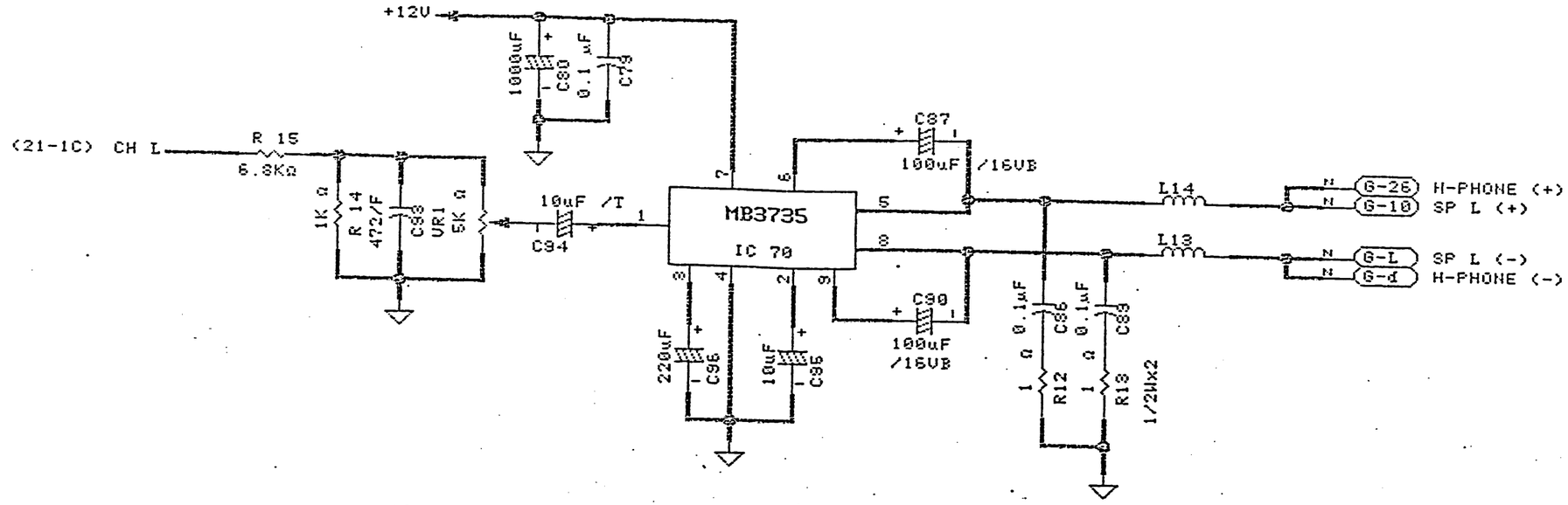

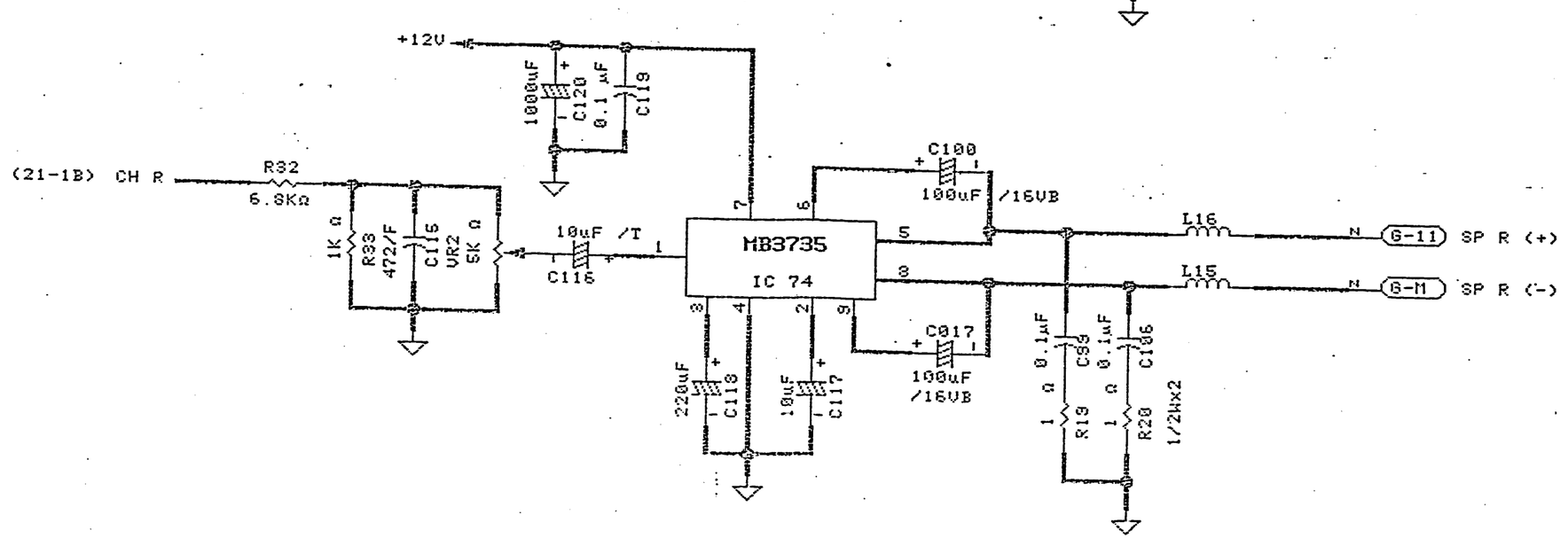

DRAWN '89.6.2	TAITO CORPORATION	
DESIGN K. Moriyama	NAME CPU P.C.B	
CHECK t.morita	SCHEMATIC DIAGRAM	
APPROVED	SIZE A3 / CODE サイトストライカー / DWG. NO. W5100330A	
APPROVED	SCALE / RELEASE DATE / SHEET	

REVISIONS			
LTR	DESCRIPTION	DATE	APPROVED

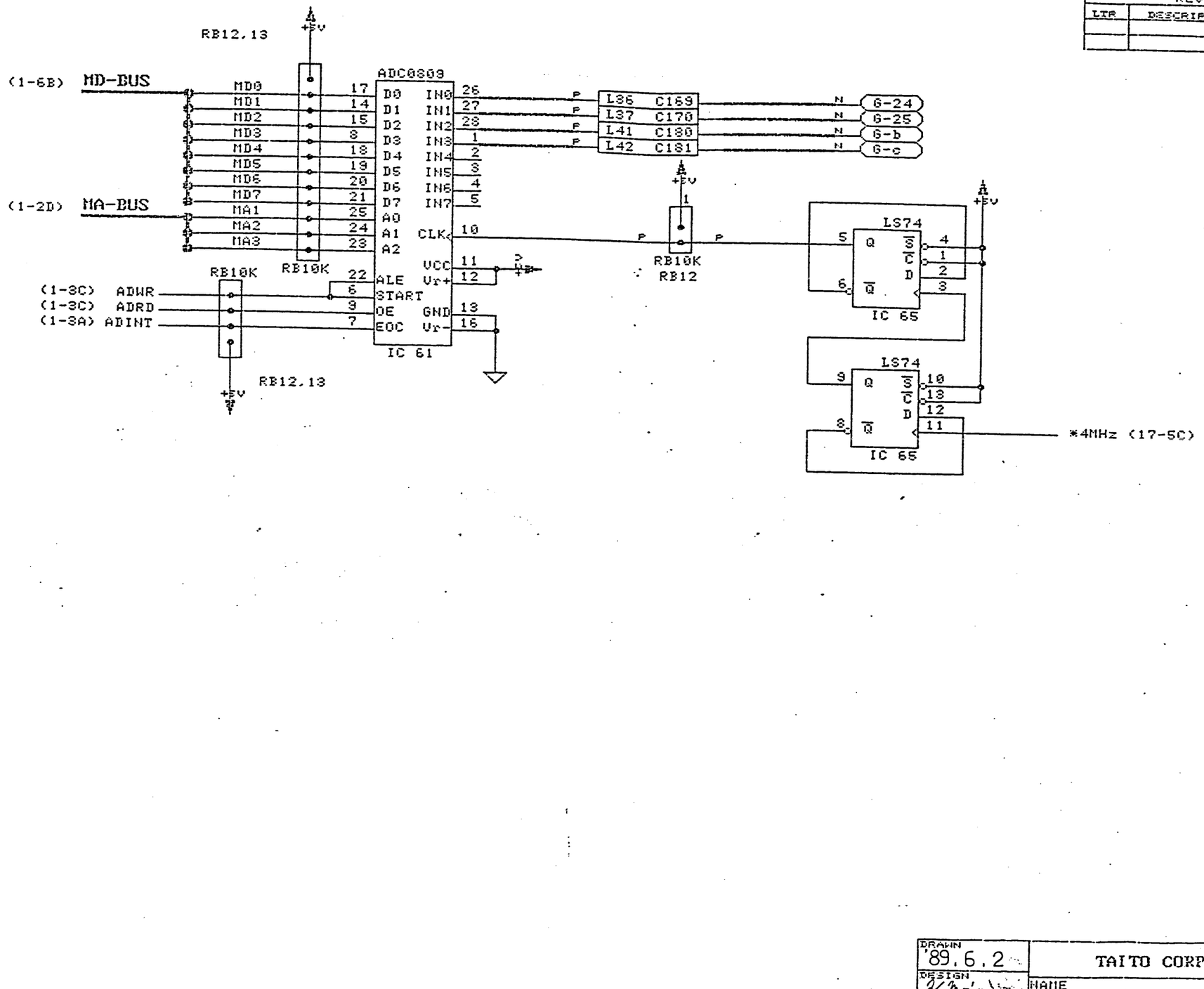

DRAWN '89.6.2	TAITO CORPORATION		
DESIGN K. Moriyama	NAME CPU P.C.B		
CHECK k.morita	SCHEMATIC DIAGRAM		
APPROVED	SIZE A3	CODE ナイトストライカー	DWG. NO. W5100330A
APPROVED	SCALE 1 / 1	RELEASE DATE	SHEET 23 / 26

REVISIONS			
LTR	DESCRIPTION	DATE	APPROVED

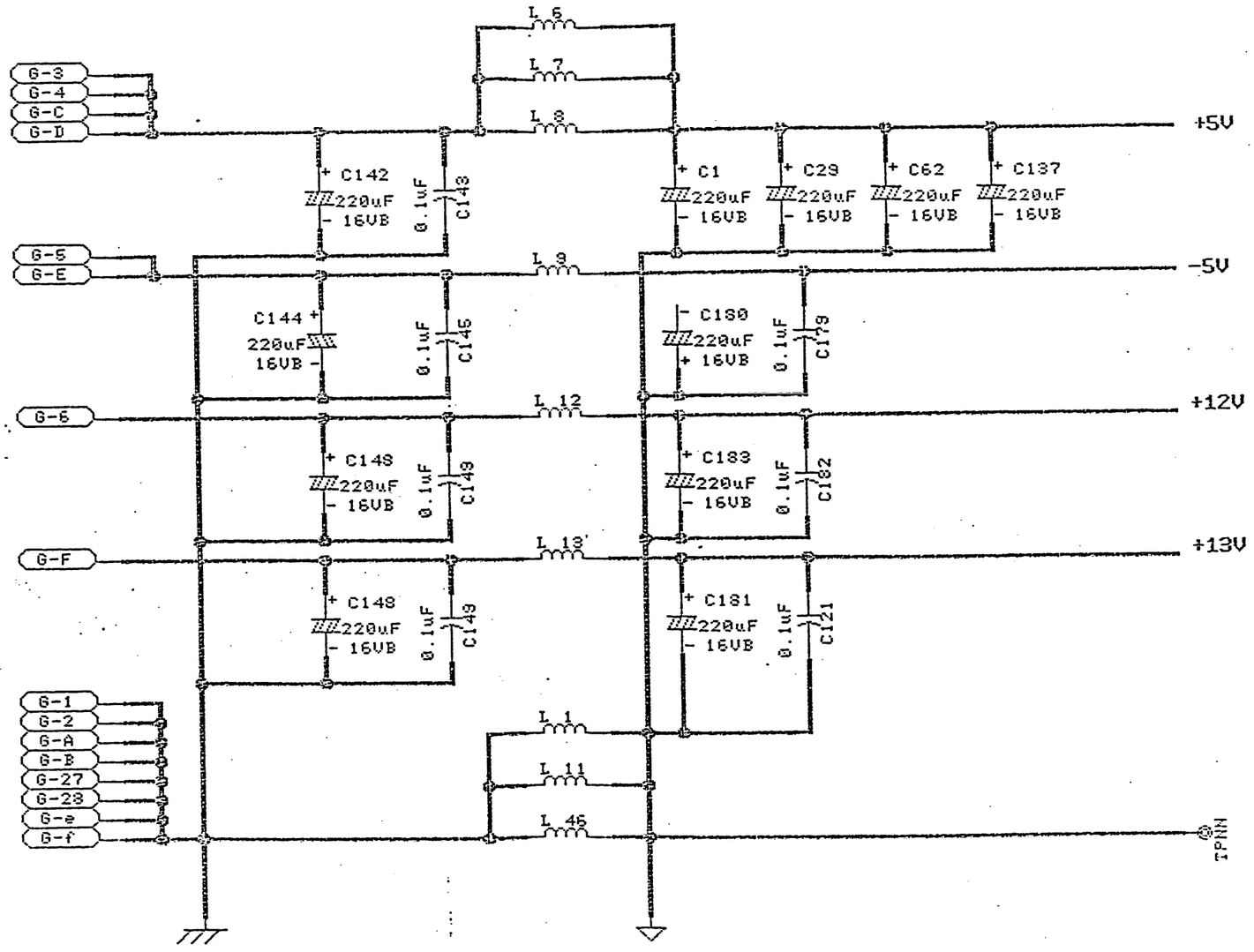

DRAWN '89.6.2	TAITO CORPORATION		
DESIGN K. Moriyama	NAME CPU P.C.B		
CHECK	SCHEMATIC DIAGRAM		
APPROVED	SIZE A3	CODE ナイトストライカー	DWG. NO. W5100330A
APPROVED	SCALE 1 / 1	RELEASE DATE	SHEET 24 / 26

REVISIONS			
LTR	DESCRIPTION	DATE	APPROVED

E-CONECTER

+5V	E-1	E-2	OD0
+5V	E-3	E-4	OD1
+5V	E-5	E-6	OD2
+5V	E-7	E-8	OD3
+5V	E-9	E-10	OD4
GND	E-11	E-12	OD5
GND	E-13	E-14	OD6
GND	E-15	E-16	OD7
GND	E-17	E-18	OD8
GND	E-19	E-20	OD9
GND	E-21	E-22	OD10
GND	E-23	E-24	OD11
GND	E-25	E-26	OD12
GND	E-27	E-28	OD13
GND	E-29	E-30	OD14
GND	E-31	E-32	OD15
GND	E-33	E-34	OA1
GND	E-35	E-36	OA2
GND	E-37	E-38	OA3
GND	E-39	E-40	OA4
GND	E-41	E-42	OA5
GND	E-43	E-44	OA6
GND	E-45	E-46	OA7
GND	E-47	E-48	OA8
GND	E-49	E-50	OA9
+5V	E-51	E-52	OA10
+5V	E-53	E-54	OR/W
+5V	E-55	E-56	OLDS
+5V	E-57	E-58	OUDS
+5V	E-59	E-60	

F-CONECTER

+5V	F-1	F-2	OBB0
+5V	F-3	F-4	OBB1
+5V	F-5	F-6	OBB2
+5V	F-7	F-8	OBB3
GND	F-9	F-10	OBB4
GND	F-11	F-12	OBB5
GND	F-13	F-14	OBB6
GND	F-15	F-16	OBB7
GND	F-17	F-18	OBB8
GND	F-19	F-20	OBB9
GND	F-21	F-22	OBB10
GND	F-23	F-24	OBB11
GND	F-25	F-26	OBB12
GND	F-27	F-28	
GND	F-29	F-30	VDCK0
GND	F-31	F-32	VDCK1
GND	F-33	F-34	VDCK2
GND	F-35	F-36	VDCK0*
GND	F-37	F-38	
GND	F-39	F-40	/H-SYNC*
GND	F-41	F-42	
GND	F-43	F-44	/HLD*
GND	F-45	F-46	/VLD*
GND	F-47	F-48	
GND	F-49	F-50	
GND	F-51	F-52	
+5V	F-53	F-54	OBJCS
+5V	F-55	F-56	OBJDTA
+5V	F-57	F-58	
+5V	F-59	F-60	

DRAWN '89.6.2	TAITO CORPORATION		
DESIGN K. Moriyama	NAME CPU P.C.B		
CHECK E.Moriya	SCHEMATIC DIAGRAM		
APPROVED	SIZE A3	CODE ナイトストライカー	DWG. NO. W5100330A
APPROVED	SCALE	RELEASE DATE	SHEET

REVISIONS			
LTR	DESCRIPTION	DATE	APPROVED

AMP 28PIN-U

G - CONNECTOR			
GND	1	A	GND
GND	2	B	GND
+5V	3	C	+5V
+5V	4	D	+5V
-5V	5	E	-5V
+12V	6	F	+13V
POST	7	H	POST
METER-A	8	J	METER-B
LOCK-A	9	K	LOCK-B
SP L (+)	10	L	SP L (-)
SP R (+)	11	M	SP R (-)
I/O A1	12	N	I/O A0
I/O A2	13	P	MUTE
SONIC (+)	14	R	SERVICE
SONIC(-)	15	S	TILT
COIN-SW-A	16	T	COIN-SW-B
SEL-1P	17	U	SEL-2P
1P-UP	18	V	SHOT LAMP
1P-DOWN	19	W	START LAMP
1P-LEFT	20	X	JOY MOVE
1P-RIGHT	21	Y	
1P-SHOT	22	Z	
1P-WARP	23	a	
1P-ADX	24	b	ADX-ADJ
1P-ADY	25	c	ADY-ADJ
H-PHONE (+)	26	d	H-PHONE (-)
GND	27	e	GND
GND	28	f	GND

H-POST HEADER 5PIN SIDE

V - CONNECTOR	
VIDEO GND	1
VIDEO B	2
VIDEO G	3
VIDEO R	4
VIDEO SYNC	5

ANGLE-PINHEADER 50PIN

M - CONNECTOR			
MCD00	1	26	GND
MCD01	2	27	GND
MCD02	3	28	GND
MCD03	4	29	GND
MCD04	5	30	GND
MCD05	6	31	GND
MCD10	7	32	GND
MCD11	8	33	GND
MCD12	9	34	GND
MCD13	10	35	GND
MCD14	11	36	GND
MCD15	12	37	GND
MCD20	13	38	GND
MCD21	14	39	GND
MCD22	15	40	GND
MCD23	16	41	GND
MCD24	17	42	GND
MCD25	18	43	GND
MLAMP1	19	44	GND
MLAMP2	20	45	GND
MALMP3	21	46	GND
SPOT1	22	47	GND
SPOT2	23	48	GND
GND	24	49	GND
GND	25	50	GND

DRAWN '89.6.2	TAITO CORPORATION	
DESIGN K. Moriyama	NAME CPU P.C.B	
CHECK K.Morita	SCHEMATIC DIAGRAM	
APPROVED	SIZE A3 / CODE ナイトストライカー / DWG. NO. W5100330A	
APPROVED	SCALE 1 / 1	RELEASE DATE / SHEET 26 / 26

REVISIONS			
LTR	DESCRIPTION	DATE	APPROVED

出図 1.6.18 技術課

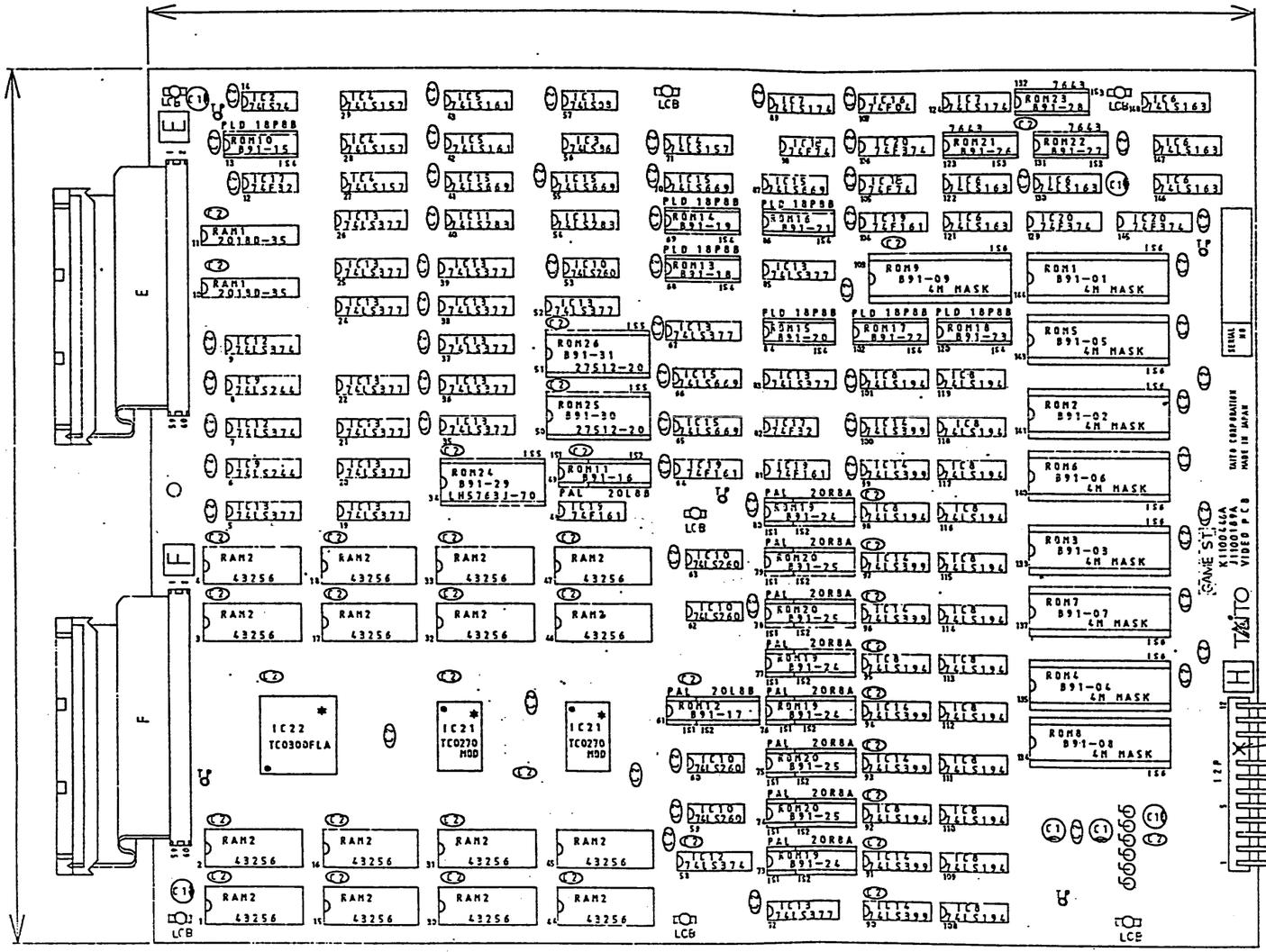

CATHODE MARK
ELEC.BLOCK
CAP.CERAMIC

NOTE 1. SYMBOL MARK

SIDE VIEW

NOTE 2. BEADS FILTER

FLAT PACKAGE

SIDE VIEW
LCB

NOTE 3. LOCKING SUPPOT

一般公差(±)					
呼称寸法	1級	2級	3級	4級	5級
5 マデ	0.1	0.1	0.2	0.3	0.5
5~ 15	0.1	0.2	0.3	0.5	0.8
15~ 50	0.2	0.3	0.5	0.8	1.2
50~100	0.3	0.5	0.8	1.2	1.8
100~250	0.5	0.8	1.2	1.8	3.0
250~500	0.8	1.2	1.8	3.0	5.0
500~1500	1.2	1.8	3.0	5.0	8.0
角度公差	20'	40'	1°30'	3°	

THIRD ANGLE PROJECTION
UNLESS OTHERWISE SPECIFIED DIMENSIONS ARE IN MILLIMETRES
TOLERANCES
GENERAL ±
HOLE DIA ± -
ANGLES ±
MATERIAL
FINISH
DO NOT SCALE DRAWING

DRAWN 6.2.'89
DESIGN F.Kuroko
CHECK K.Moriki
APPROVED
APPROVED

TAITO TAITO CORPORATION
NAME VIDEO PCB ASSY
SIZE A2 NIGHT STRIKER DWG NO. K1100446A
SCALE RELEASE DATE SHEET 1/2

84					
83					
82					
81					
80					
79			GAME STICKER	(K1100446A)	1
78					
77	LCB	F9000128A	LOCKING SUPPOT	LCB-10	7
76					
75	E.F	L5000071A	FRC HARNESS ASSY	60P DIP TYP	2
74					
73	L	C1101201A	BEADS FILTER	ZBF503S-01TA	6
72					
71	TP	C0600403A	TEST POINT CHIP	L=7.8	5
70					
69	IS6	C0550090A	I.C. SOCKET	40P	9
68	IS5	C0550080A		28P	3
67	IS4	C0550052A		20P	7
66	IS3	C0550040A		18P	3
65	IS2	C0550033A		16P	10
64	IS1	C0550001A	I.C. SOCKET	8P	10
63					
62	12P	C0500034A	POST HEADER-12P	5272-12	1
61					
60	ROM26	B2004160A	ROM B91-31	27512-20	1
59	ROM25	B2004159A	ROM B91-30	27512-20	1
58	ROM24	B2004158A	ROM B91-29	LH5763J-70	1
57	ROM23	B2004157A	ROM B91-28	7643	1
56	ROM22	B2004156A	ROM B91-27	7643	1
55	ROM21	B2004155A	ROM B91-26	7643	1
54	ROM20	B2004154A	PAL B91-25	20R8A	4
53	ROM19	B2004153A	PAL B91-24	20R8A	4
52	ROM18	B2004152A	PLD B91-23	18P8B	1
51	ROM17	B2004151A	PLD B91-22		1
50	ROM16	B2004150A	PLD B91-21		1
49	ROM15	B2004149A	PLD B91-20		1
48	ROM14	B2004148A	PLD B91-19		1
47	ROM13	B2004147A	PLD B91-18	18P8B	1
46	ROM12	B2004146A	PAL B91-17	20L8B	1
45	ROM11	B2004145A	PAL B91-16	20L8B	1
44	ROM10	B2004144A	PLD B91-15	18P8B	1
43	ROM9	B2004057A	ROM B91-09	4M MASK	1
42	ROM8	B2004056A	ROM B91-08		1
41	ROM7	B2004055A	ROM B91-07		1
40	ROM6	B2004054A	ROM B91-06		1
39	ROM5	B2004053A	ROM B91-05		1
38	ROM4	B2004052A	ROM B91-04		1
37	ROM3	B2004051A	ROM B91-03		1
36	ROM2	B2004050A	ROM B91-02		1
35	ROM1	B2004049A	ROM B91-01	4M MASK	1
34					

REVISIONS

LTR	DESCRIPTION	DATE	APPROVED

山交 1.6.19 技術課

33	IC22	B16Z0046A	CUSTOM I.C.	TC0300FLA	1
32	IC21	B16Z0043A	CUSTOM I.C.	TC0270MOD	2
31					
30	RAM2	B10X0029B	S-RAM	43256-100	16
29	RAM1	B10X0028A	S-RAM	2018D-35	2
28					
27	IC20	B05X2374A	F I.C.	74F374	3
26	IC19	B05X2161A		74F161	4
25	IC18	B05X2074A		74F74	2
24	IC17	B05X2032A		74F32	2
23	IC16	B05X2004A	F I.C.	74F04	1
22					
21	IC15	B01X0669A	LS I.C.	74LS669	6
20	IC14	B01X0399A		74LS399	8
19	IC13	B01X0377A		74LS377	18
18	IC12	B01X0374A		74LS374	3
17	IC11	B01X0283A		74LS283	2
16	IC10	B01X0260A		74LS260	5
15	IC9	B01X0244A		74LS244	2
14	IC8	B01X0194A		74LS194	16
13	IC7	B01X0174A		74LS174	2
12	IC6	B01X0163A		74LS163	6
11	IC5	B01X0161A		74LS161	2
10	IC4	B01X0157A		74LS157	4
9	IC3	B01X0086A		74LS86	1
8	IC2	B01X0074A		74LS74	1
7	IC1	B01X0008A	LS I.C.	74LS08	1
6					
5	C2	A1200123A	CAP CERAMIC	25V 100000p	99
4					
3	C1	A1000135A	CAP ELEC BLOCK	16V 220μF	6
2					
1		J1100189A	VIDEO PCBOARD	360X300	1
ITEM NO.	SYM	PART OR IDENTIFYING NO.	NOMENCLATURE OR DESCRIPTION		QTY REQD

DRAWN 6.2.'89

DESIGN F.Kaneko

CHECK K.Morita 森田

APPROVED

APPROVED

TAITO CORPORATION

NAME VIDEO PCB ASSY

SIZE A3 | CODE IDENT NO. NIGHT STRIKER | DWG. NO. K1100446A

SCALE | RELEASE DATA | SHEET 2/2

REVISIONS			
LTR	DESCRIPTION	DATE	APPROVED

IC148 LS163 · IC147 LS163 · IC146 LS163 · IC122 LS163 · IC121 LS163 · IC130 LS163 · IC123 HM7643A · IC131 HM7643A · IC132 HM7643A · IC124 LS174 · IC105 F74 · IC106 F374 · IC107 F04

/FRAMWST
(5-B5)(18-A5)
(21-B4)

①(13-B3)(18-A4)(17-C7)
②(3-B4)(5-B4)
③(2-A4)(5-B5)(7-B7)
(17-C7)(21-D7)
④(17-C6)
⑤(5-B3)(16-A5)(21-B5)

/OBJONOFF
/OBJONLO
/OBJONOF
/HOPLD
/DISP
/DISP*
(5-B3)
(21-B5)
DISP
(13-C4)
(15-B4)
(16-A5)

VOCK* (FCN)
/HLO* (FCN)
/H-SYNC* (FCN)
/HLO* (FCN)
RCMADD (13-C5)

DRAWN '89.6.2	TAITO CORPORATION		
DESIGN K. Moriyama	NAME VIDEO P.C. BOARD SCHEMATIC DIAGRAM		
CHECK K.Morita	SIZE A3	CODE ナイトストライカー	DWG. NO. W5100329A
APPROVED	SCALE 1 / 1	RELEASE DATE	SHEET 1 / 23
APPROVED			

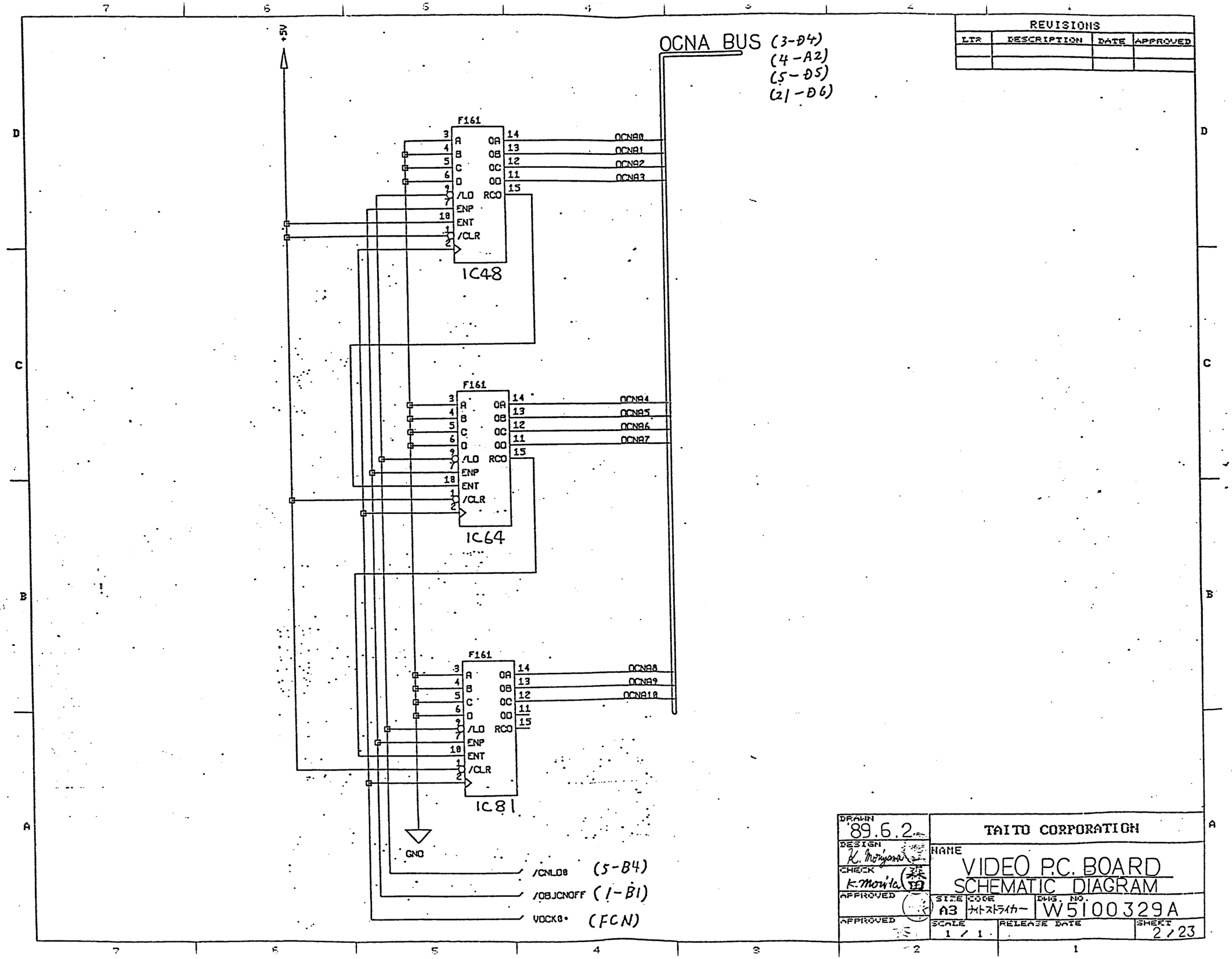

REVISIONS			
LTR	DESCRIPTION	DATE	APPROVED

DRAWN 89.6.2	TAITO CORPORATION
DESIGN K. Moriyama	NAME VIDEO P.C. BOARD SCHEMATIC DIAGRAM
CHECK K. Morita	
APPROVED	SIZE A3 · CODE ナイトストライカー · DWG. NO. W5100329A
APPROVED	SCALE 1 / 1 · RELEASE DATE · SHEET 2 / 23

REVISIONS			
LTR	DESCRIPTION	DATE	APPROVED

F04

/OBNOLO (5-B4)

IC107

+5V

(2-D3) OCNA BUS

OA BUS (ECN)

LS161

IC42

IC57 LS08

LS161

IC43

/OBJCNLO (1-B1)

VOCK8 (FCN)

GND

IC107 F04

/OEVEL (4-C4)

/OEVEH (4-B4)

LS157

IC27

IC28

IC29

OBA BUS (4-D7)

DRAWN 89.6.2	TAITO CORPORATION		
DESIGN K. Moriyama	NAME VIDEO P.C. BOARD		
CHECK K. Morita	SCHEMATIC DIAGRAM		
APPROVED	SIZE A3	CODE ナイト・ストライカー	DWG NO W5100329A
APPROVED	SCALE 1/1	RELEASE DATE	SHEET 3/23

REVISIONS			
LTR	DESCRIPTION	DATE	APPROVED

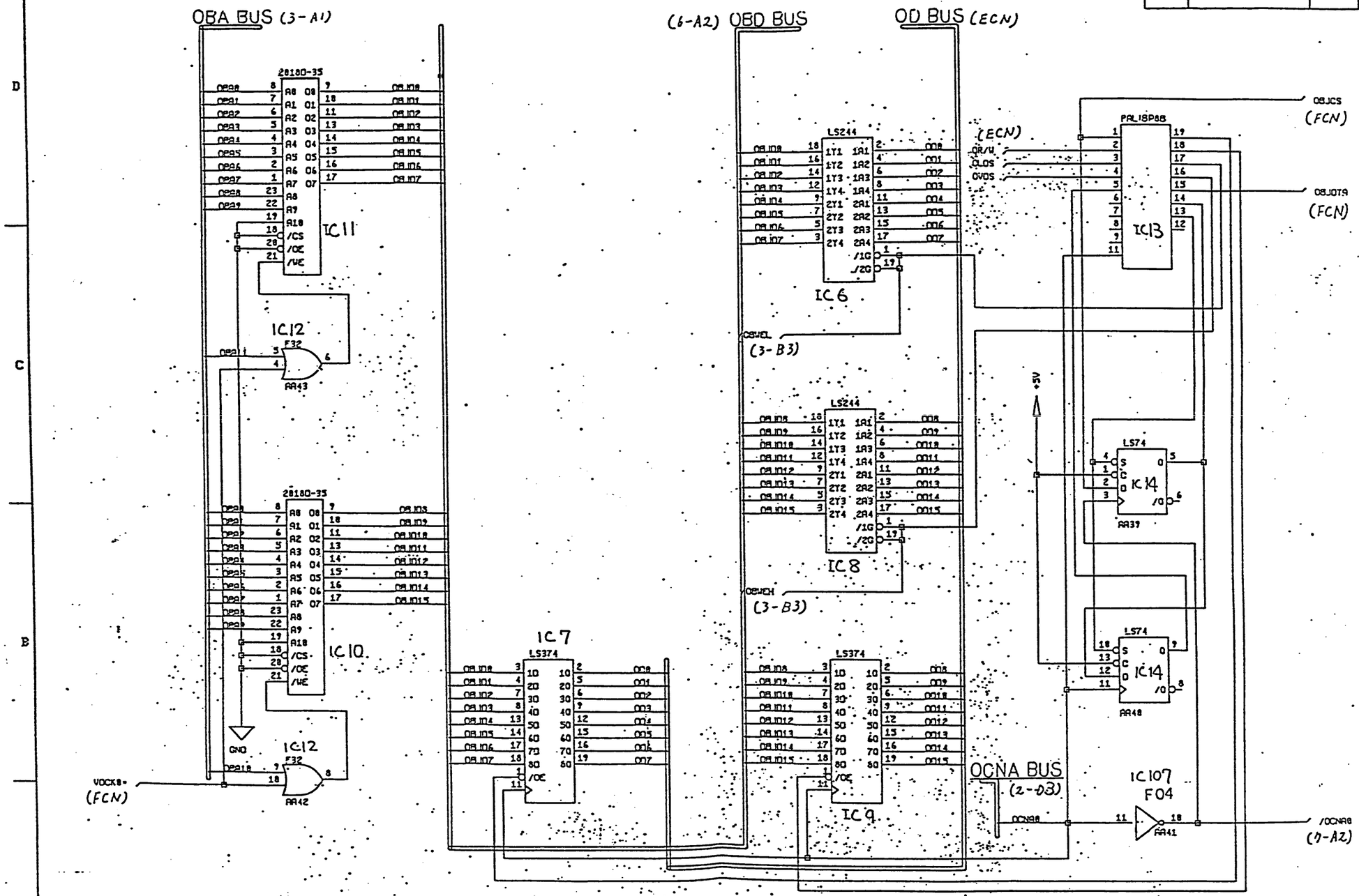

DRAWN 89.6.2	TAITO CORPORATION
DESIGN K. Moriyama	NAME VIDEO P.C. BOARD SCHEMATIC DIAGRAM
CHECK K. Morita	
APPROVED	SIZE A3 · CODE ナイト・ストライカー · DWG. NO W5100329A
APPROVED	SCALE 1 / 1 · RELEASE DATE · SHEET 4/23

REVISIONS			
LTR	DESCRIPTION	DATE	APPROVED

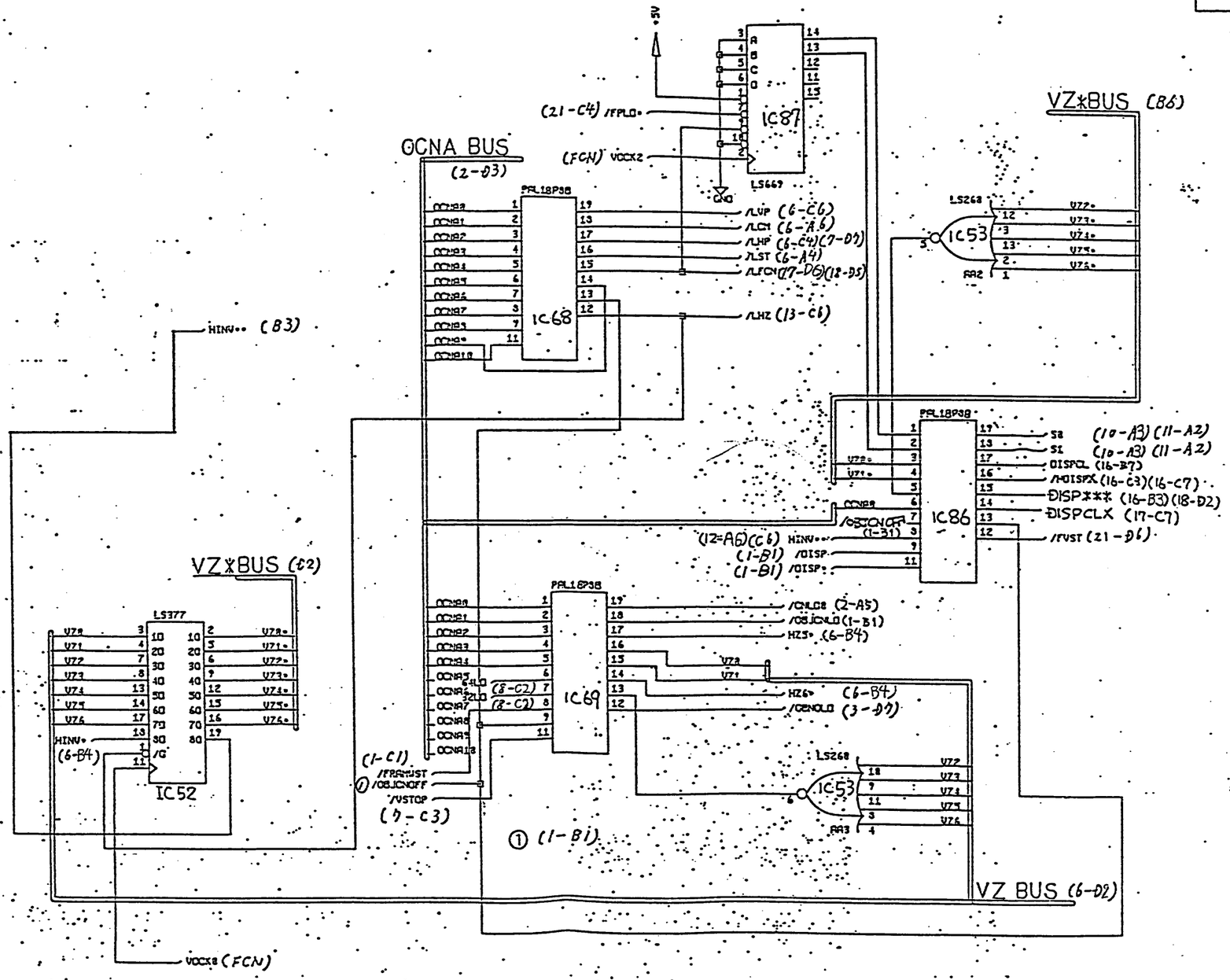

DRAWN '89.6.2	TAITO CORPORATION		
DESIGN K. Moriyama	NAME VIDEO P.C. BOARD SCHEMATIC DIAGRAM		
CHECK K.Morita	SIZE A3	CODE ナイトストライカー	DWG. NO. W5100329A
APPROVED	SCALE 1 / 1	RELEASE DATE	SHEET 5/23
APPROVED			

REVISIONS			
LTR	DESCRIPTION	DATE	APPROVED

VP BUS (03) (18-D6)

HP BUS (13-D6)

VP BUS (D6)

VZ BUS (5-A2) (7-D5) (8-C5)

HZ BUS (13-D6)

ST BUS (7-A5)

VINV (7-C5)

/LVP (5-D4)

/LHP (5-D4)

/LCH (5-D4)

/LST (5-C4)

VOCK8 (1-A7) (FCN)

HZ5 (5-B4)(7-A5)(21-D6)

HZ6 (5-B4)(7-A5)(21-D6)

HINV (5-B7)(7-A6)

CM BUS (16-A3)

OBD BUS (4-D4)

DRAWN	'89.6.2	TAITO CORPORATION	
DESIGN	K. Morizumi	NAME	VIDEO P.C. BOARD SCHEMATIC DIAGRAM
CHECK	K. Morita	SIZE A3	CODE ナイトストライカー
APPROVED		DWG. NO.	W5100329A
APPROVED		SCALE 1 / 1	RELEASE DATE
		SHEET	6 / 23

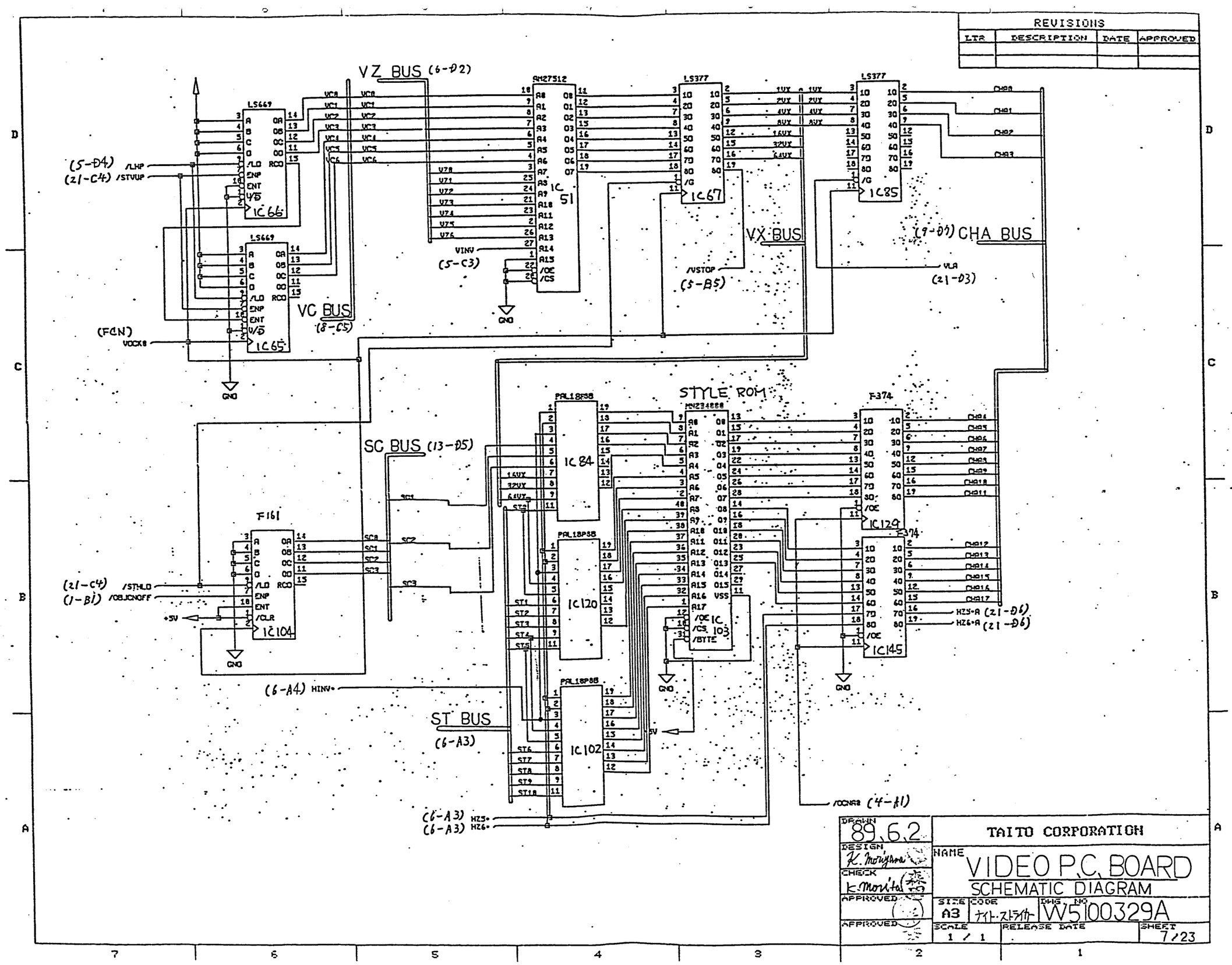
REVISIONS
LTR
DESCRIPTION
DATE
APPROVED
VZ BUS (6-D2)
AM27512
IC 51
LS377
IC67
IC85
LS669
IC66
IC65
VC BUS (8-C5)
VX BUS
/VSTOP (5-B5)
(9-D7) CHA BUS
VLA (21-D3)
(5-D4) /LHP
(21-C4) /STVUP
(FCN) VOCK8
VINV (5-C3)
GND
STYLE ROM
MN234888
PAL18P8B
IC84
IC120
IC102
IC103
F374
IC129
IC145
F161
IC104
SC BUS (13-D5)
(21-C4) /STHLD
(1-B1) /OBJCNOFF
+5V
(6-A4) HINV
ST BUS (6-A3)
(6-A3) HZ5
(6-A3) HZ6
HZ5-A (21-D6)
HZ6-A (21-D6)
/OCNA8 (4-A1)
DRAWN 89.6.2
DESIGN K. Moriyama
CHECK K. Morita
APPROVED
TAITO CORPORATION
NAME VIDEO P.C. BOARD
SCHEMATIC DIAGRAM
SIZE A3
CODE ナイト・ストライカー
DWG. NO W5100329A
SCALE 1 / 1
RELEASE DATE
SHEET 7/23

REVISIONS			
LTR	DESCRIPTION	DATE	APPROVED

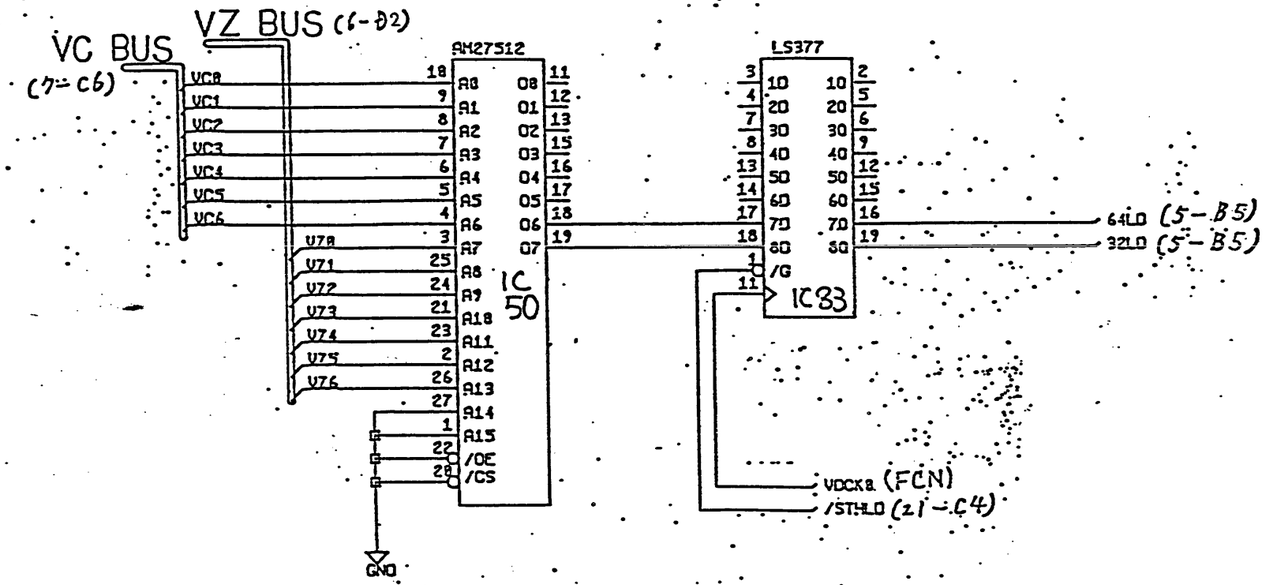

DRAWN 89.6.2	TAITO CORPORATION		
DESIGN K. Moriyama	NAME VIDEO P.C. BOARD		
CHECK K. Morita	SCHEMATIC DIAGRAM		
APPROVED	SIZE A3	CODE ナイト・ストライカー	DWG NO W5100329A
APPROVED	SCALE 1/1	RELEASE DATE	SHEET 8/23

(7-D1)

CHA-BUS

REVISIONS			
LTR	DESCRIPTION	DATE	APPROVED

234000

CHA0	9	A0	Q0	13	CHD0
CHA1	8	A1	Q1	15	CHD1
CHA2	7	A2	Q2	17	CHD2
CHA3	6	A3	Q3	19	CHD3
CHA4	5	A4	Q4	22	CHD4
CHA5	4	A5	Q5	24	CHD5
CHA6	3	A6	Q6	26	CHD6
CHA7	2	A7	Q7	28	CHD7
CHA8	40	A8	Q8	14	CHD8
CHA9	39	A9	Q9	16	CHD9
CHA10	38	A10	Q10	18	CHD10
CHA11	37	A11	Q11	20	CHD11
CHA12	36	A12	Q12	23	CHD12
CHA13	35	A13	Q13	25	CHD13
CHA14	34	A14	Q14	27	CHD14
CHA15	33	A15	Q15	29	CHD15
CHA16	32	A16	/A1		
CHA17	1	A17			
	12	OE			
	10	CS			
	31	BYTE			

IC 144

234000

CHA0	9	A0	Q0	13	CHD32
CHA1	8	A1	Q1	15	CHD33
CHA2	7	A2	Q2	17	CHD34
CHA3	6	A3	Q3	19	CHD35
CHA4	5	A4	Q4	22	CHD36
CHA5	4	A5	Q5	24	CHD37
CHA6	3	A6	Q6	26	CHD38
CHA7	2	A7	Q7	28	CHD39
CHA8	40	A8	Q8	14	CHD40
CHA9	39	A9	Q9	16	CHD41
CHA10	38	A10	Q10	18	CHD42
CHA11	37	A11	Q11	20	CHD43
CHA12	36	A12	Q12	23	CHD44
CHA13	35	A13	Q13	25	CHD45
CHA14	34	A14	Q14	27	CHD46
CHA15	33	A15	Q15	29	CHD47
CHA16	32	A16	/A1		
CHA17	1	A17			
	12	OE			
	10	CS			
	31	BYTE			

IC 138

234000

CHA0	9	A0	Q0	13	CHD0
CHA1	8	A1	Q1	15	CHD1
CHA2	7	A2	Q2	17	CHD2
CHA3	6	A3	Q3	19	CHD3
CHA4	5	A4	Q4	22	CHD4
CHA5	4	A5	Q5	24	CHD5
CHA6	3	A6	Q6	26	CHD6
CHA7	2	A7	Q7	28	CHD7
CHA8	40	A8	Q8	14	CHD8
CHA9	39	A9	Q9	16	CHD9
CHA10	38	A10	Q10	18	CHD10
CHA11	37	A11	Q11	20	CHD11
CHA12	36	A12	Q12	23	CHD12
CHA13	35	A13	Q13	25	CHD13
CHA14	34	A14	Q14	27	CHD14
CHA15	33	A15	Q15	29	CHD15
CHA16	32	A16	/A1		
CHA17	1	A17			
	12	OE			
	10	CS			
	31	BYTE			

IC 143

234000

CHA0	9	A0	Q0	13	CHD32
CHA1	8	A1	Q1	15	CHD33
CHA2	7	A2	Q2	17	CHD34
CHA3	6	A3	Q3	19	CHD35
CHA4	5	A4	Q4	22	CHD36
CHA5	4	A5	Q5	24	CHD37
CHA6	3	A6	Q6	26	CHD38
CHA7	2	A7	Q7	28	CHD39
CHA8	40	A8	Q8	14	CHD40
CHA9	39	A9	Q9	16	CHD41
CHA10	38	A10	Q10	18	CHD42
CHA11	37	A11	Q11	20	CHD43
CHA12	36	A12	Q12	23	CHD44
CHA13	35	A13	Q13	25	CHD45
CHA14	34	A14	Q14	27	CHD46
CHA15	33	A15	Q15	29	CHD47
CHA16	32	A16	/A1		
CHA17	1	A17			
	12	OE			
	10	CS			
	31	BYTE			

IC 137

234000

CHA0	9	A0	Q0	13	CHD16
CHA1	8	A1	Q1	15	CHD17
CHA2	7	A2	Q2	17	CHD18
CHA3	6	A3	Q3	19	CHD19
CHA4	5	A4	Q4	22	CHD20
CHA5	4	A5	Q5	24	CHD21
CHA6	3	A6	Q6	26	CHD22
CHA7	2	A7	Q7	28	CHD23
CHA8	40	A8	Q8	14	CHD24
CHA9	39	A9	Q9	16	CHD25
CHA10	38	A10	Q10	18	CHD26
CHA11	37	A11	Q11	20	CHD27
CHA12	36	A12	Q12	23	CHD28
CHA13	35	A13	Q13	25	CHD29
CHA14	34	A14	Q14	27	CHD30
CHA15	33	A15	Q15	29	CHD31
CHA16	32	A16	/A1		
CHA17	1	A17			
	12	OE			
	10	CS			
	31	BYTE			

IC 141

234000

CHA0	9	A0	Q0	13	CHD48
CHA1	8	A1	Q1	15	CHD49
CHA2	7	A2	Q2	17	CHD50
CHA3	6	A3	Q3	19	CHD51
CHA4	5	A4	Q4	22	CHD52
CHA5	4	A5	Q5	24	CHD53
CHA6	3	A6	Q6	26	CHD54
CHA7	2	A7	Q7	28	CHD55
CHA8	40	A8	Q8	14	CHD56
CHA9	39	A9	Q9	16	CHD57
CHA10	38	A10	Q10	18	CHD58
CHA11	37	A11	Q11	20	CHD59
CHA12	36	A12	Q12	23	CHD60
CHA13	35	A13	Q13	25	CHD61
CHA14	34	A14	Q14	27	CHD62
CHA15	33	A15	Q15	29	CHD63
CHA16	32	A16	/A1		
CHA17	1	A17			
	12	OE			
	10	CS			
	31	BYTE			

IC 135

234000

CHA0	9	A0	Q0	13	CHD16
CHA1	8	A1	Q1	15	CHD17
CHA2	7	A2	Q2	17	CHD18
CHA3	6	A3	Q3	19	CHD19
CHA4	5	A4	Q4	22	CHD20
CHA5	4	A5	Q5	24	CHD21
CHA6	3	A6	Q6	26	CHD22
CHA7	2	A7	Q7	28	CHD23
CHA8	40	A8	Q8	14	CHD24
CHA9	39	A9	Q9	16	CHD25
CHA10	38	A10	Q10	18	CHD26
CHA11	37	A11	Q11	20	CHD27
CHA12	36	A12	Q12	23	CHD28
CHA13	35	A13	Q13	25	CHD29
CHA14	34	A14	Q14	27	CHD30
CHA15	33	A15	Q15	29	CHD31
CHA16	32	A16	/A1		
CHA17	1	A17			
	12	OE			
	10	CS			
	31	BYTE			

IC 140

234000

CHA0	9	A0	Q0	13	CHD48
CHA1	8	A1	Q1	15	CHD49
CHA2	7	A2	Q2	17	CHD50
CHA3	6	A3	Q3	19	CHD51
CHA4	5	A4	Q4	22	CHD52
CHA5	4	A5	Q5	24	CHD53
CHA6	3	A6	Q6	26	CHD54
CHA7	2	A7	Q7	28	CHD55
CHA8	40	A8	Q8	14	CHD56
CHA9	39	A9	Q9	16	CHD57
CHA10	38	A10	Q10	18	CHD58
CHA11	37	A11	Q11	20	CHD59
CHA12	36	A12	Q12	23	CHD60
CHA13	35	A13	Q13	25	CHD61
CHA14	34	A14	Q14	27	CHD62
CHA15	33	A15	Q15	29	CHD63
CHA16	32	A16	/A1		
CHA17	1	A17			
	12	OE			
	10	CS			
	31	BYTE			

IC 134

CHCS0 (21-D3)

CHCS1 (21-D3)

CHD-BUS

(11-7A)

(10-6D)

DRAWN	89.6.2
DESIGN	K. Moriyama
CHECK	K. Morita 森
APPROVED	
APPROVED	

TAITO CORPORATION

NAME VIDEO P.C. BOARD

SCHEMATIC DIAGRAM

SIZE	CODE	DWG. NO
A3	ナイト・ストライカー	W5100329A

SCALE	RELEASE DATE	SHEET
1 / 1		9 / 23

REVISIONS			
LTR	DESCRIPTION	DATE	APPROVED

(9-A1) CHD BUS

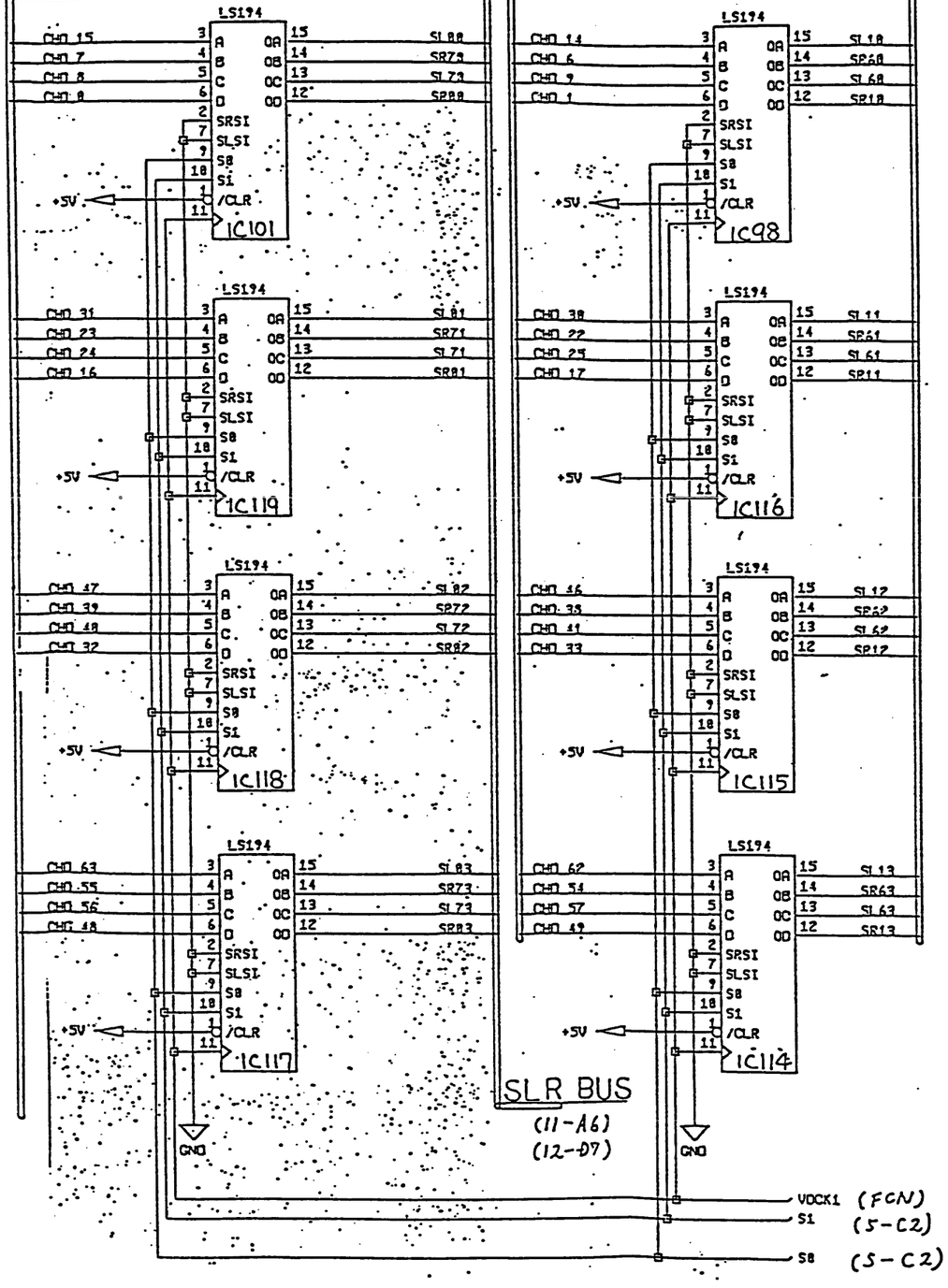

DRAWN 89.6.2	TAITO CORPORATION		
DESIGN K. Moriyama	NAME VIDEO P.C. BOARD		
CHECK K. Mori	SCHEMATIC DIAGRAM		
APPROVED	SIZE A3	CODE ナイト・ストライカー	DWG NO W5100329A
APPROVED	SCALE 1 / 1	RELEASE DATE	SHEET 10 / 23

REVISIONS			
LTR	DESCRIPTION	DATE	APPROVED

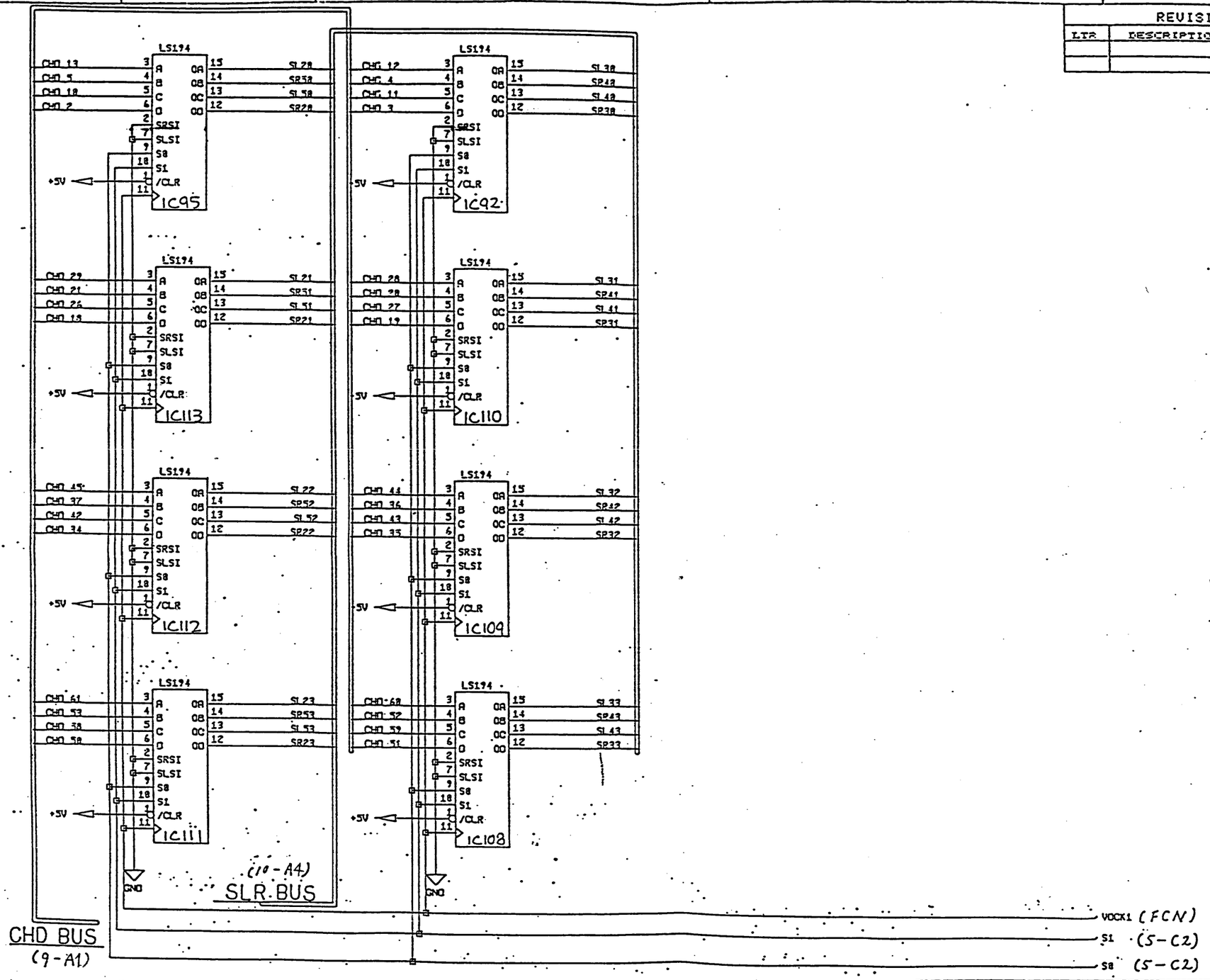

DRAWN 89.6.2	TAITO CORPORATION		
DESIGN K. Moriyama	NAME VIDEO P.C. BOARD SCHEMATIC DIAGRAM		
CHECK K. Morita	SIZE A3	CODE ナイトストライカー	DWG. NO. W5100329A
APPROVED	SCALE	RELEASE DATE	SHEET 11 of 23
APPROVED			

REVISIONS			
LTR	DESCRIPTION	DATE	APPROVED

(10-4A) SLR-BUS

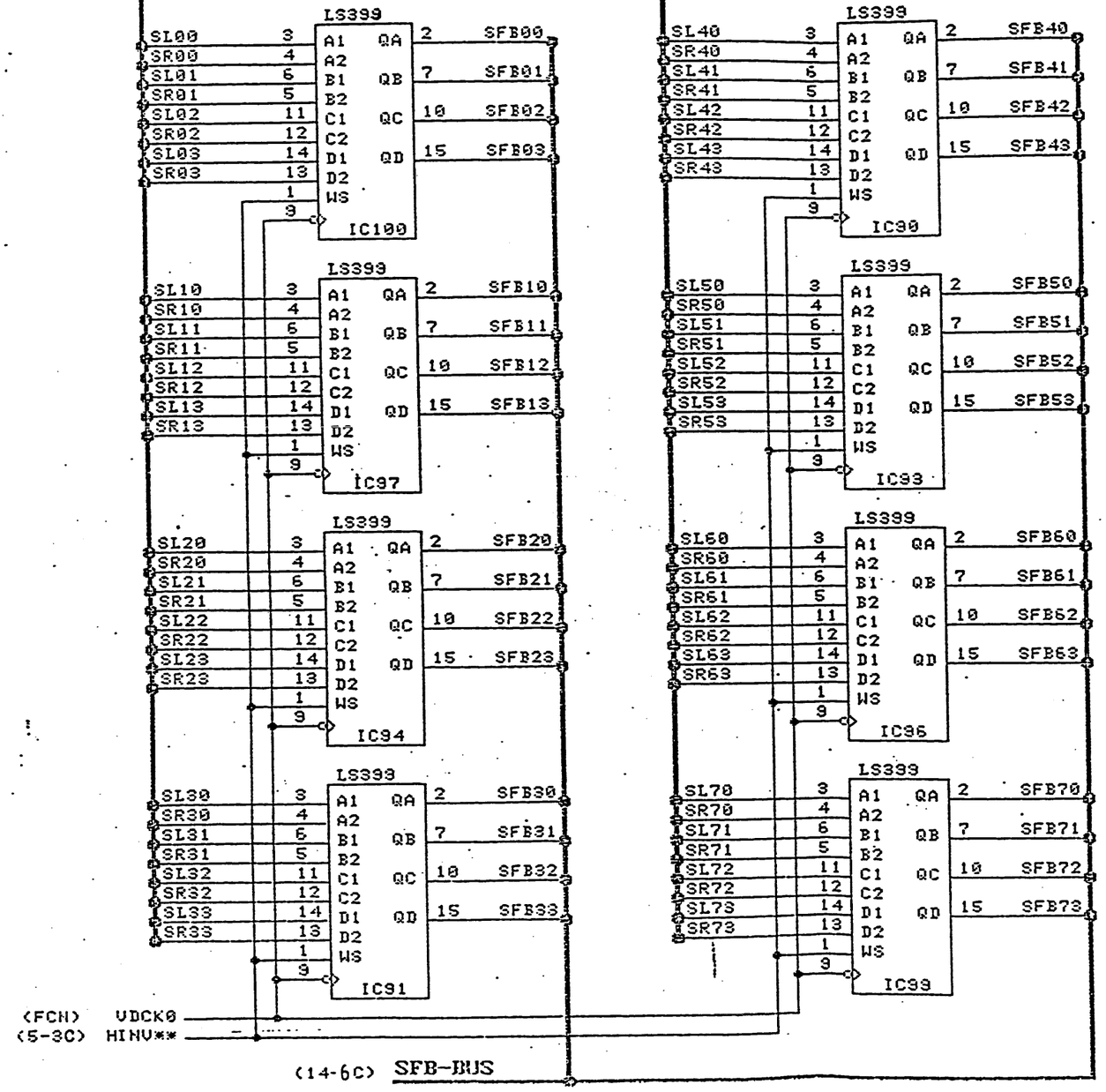

(FCN) VDCK0
(5-3C) HINV**

(14-6C) SFB-BUS

DRAWN 89.6.2	TAITO CORPORATION	
DESIGN K. Moriyama	NAME VIDEO P.C. BOARD	
CHECK K. Morita	SCHEMATIC DIAGRAM	
APPROVED	SIZE A3 / CODE ナイト・ストライカー / DWG NO W5100329A	
APPROVED	SCALE 1 / 1 / RELEASE DATE	SHEET 12 / 23

REVISIONS			
LTR	DESCRIPTION	DATE	APPROVED

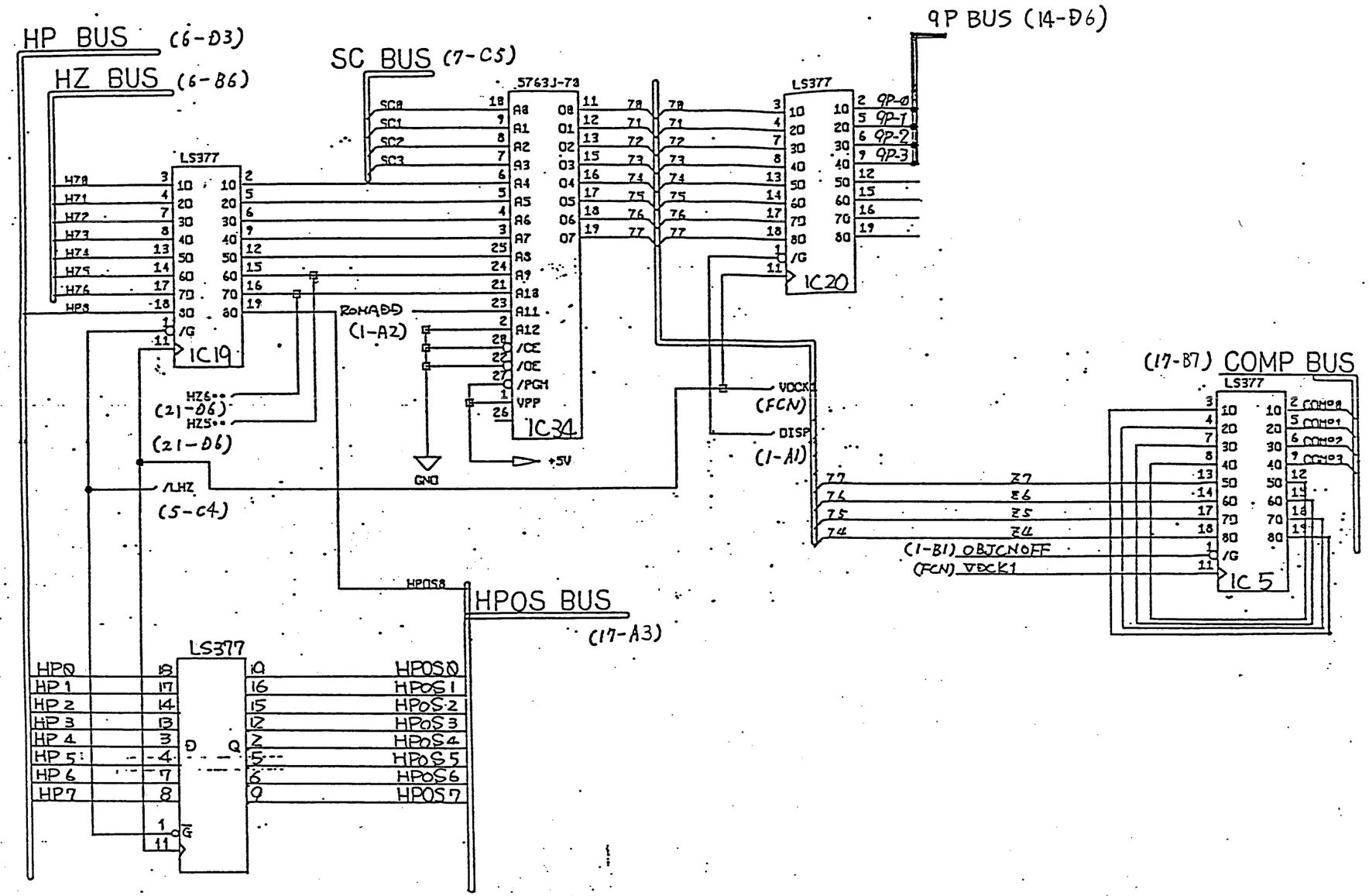

DRAWN 89.6.2	TAITO CORPORATION
DESIGN K. Moriyama	NAME VIDEO P.C. BOARD SCHEMATIC DIAGRAM
CHECK K. Mouka	
APPROVED	SIZE A3 · CODE ナイトストライカー · DWG. NO. W5100329A
APPROVED	SCALE 1 / 1 · RELEASE DATE · SHEET 13 / 23

REVISIONS			
LTR	DESCRIPTION	DATE	APPROVED

(13-D3) 9P-BUS

(12-A6) SFB BUS

(15-A4) DSCK

PAL20R8A — IC80

9P-0	2	22	7D00
9P-1	3	21	7D10
9P-2	4	20	7D20
9P-3	5	19	7D30
SFB00	6	18	7D40
SFB10	7	17	7D50
SFB20	8	16	7D60
SFB30	9	15	7D70
SFB40	10		
SFB50	11		
SFB60	14		
SFB70	23		
	13		
	1		

PAL20R8A — IC76

9P-0	2	22	7D02
9P-1	3	21	7D12
9P-2	4	20	7D22
9P-3	5	19	7D32
SFB01	6	18	7D42
SFB11	7	17	7D52
SFB21	8	16	7D62
SFB31	9	15	7D72
SFB41	10		
SFB51	11		
SFB61	14		
SFB71	23		
	13		
	1		

PAL20R8A — IC77

9P-0	2	22	7D01
9P-1	3	21	7D11
9P-2	4	20	7D21
9P-3	5	19	7D31
SFB01	6	18	7D41
SFB11	7	17	7D51
SFB21	8	16	7D61
SFB31	9	15	7D71
SFB41	10		
SFB51	11		
SFB61	14		
SFB71	23		
	13		
	1		

PAL20R8A — IC73

9P-0	2	22	7D03
9P-1	3	21	7D13
9P-2	4	20	7D23
9P-3	5	19	7D33
SFB03	6	18	7D43
SFB13	7	17	7D53
SFB23	8	16	7D63
SFB33	9	15	7D73
SFB43	10		
SFB53	11		
SFB63	14		
SFB73	23		
	13		
	1		

GND

ZDX BUS (15-A7)

DRAWN	89.6.2	TAITO CORPORATION	
DESIGN	K. Moriyama	NAME	VIDEO P.C. BOARD
CHECK	K Morita		SCHEMATIC DIAGRAM
APPROVED		SIZE A3	CODE ﾀｲﾄｽﾄﾗｲｶｰ DWG. NO. W5100329A
APPROVED		SCALE 1 / 1	RELEASE DATE — SHEET 14 / 23

REVISIONS			
LTR	DESCRIPTION	DATE	APPROVED

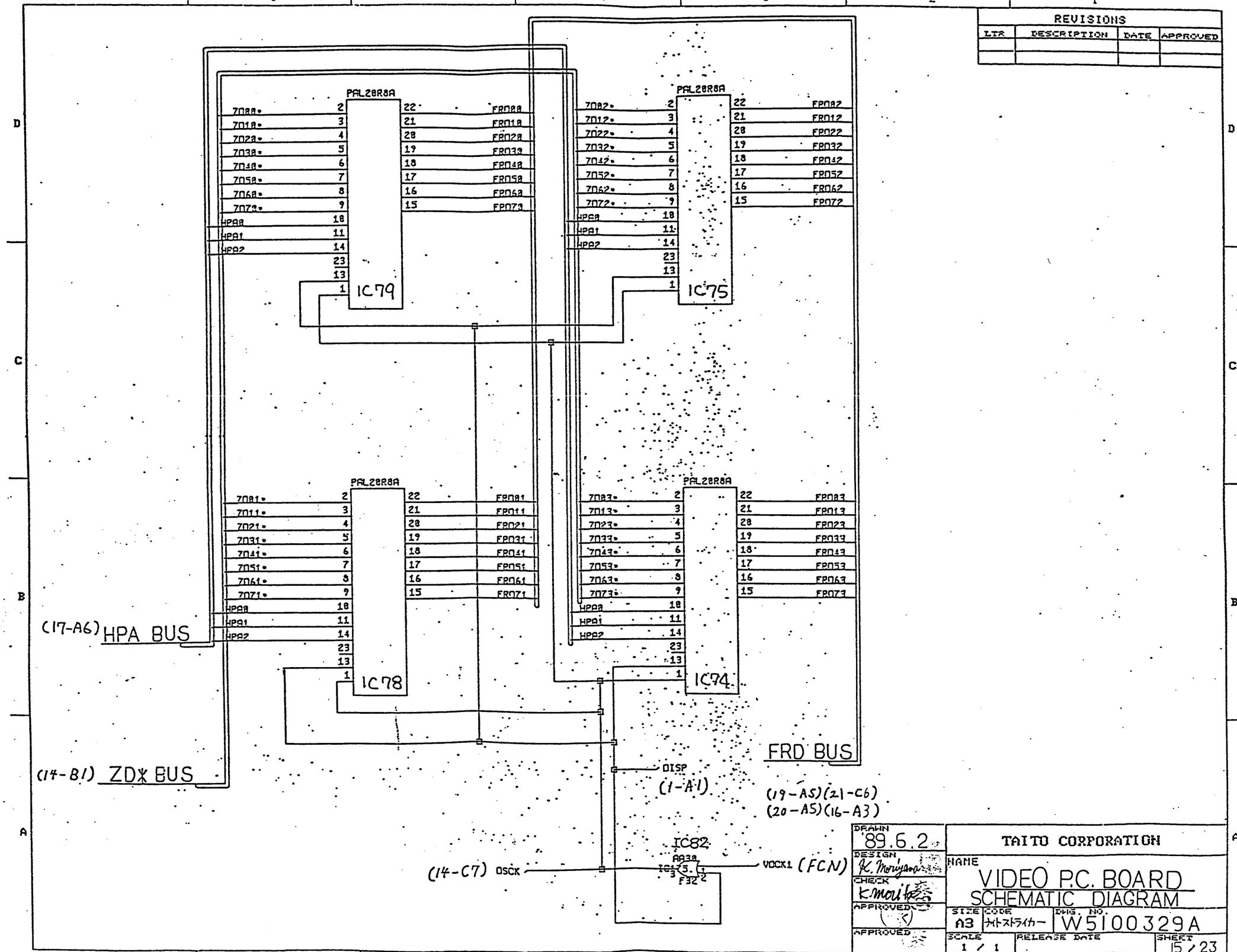

DRAWN	'89.6.2	TAITO CORPORATION	
DESIGN	K. Moriyama	NAME	VIDEO P.C. BOARD SCHEMATIC DIAGRAM
CHECK	K.Morita	SIZE	A3
APPROVED		CODE	ﾅｲﾄｽﾄﾗｲｶｰ
APPROVED		DWG. NO.	W5100329A
		SCALE	1 / 1
		RELEASE DATE	
		SHEET	15 / 23

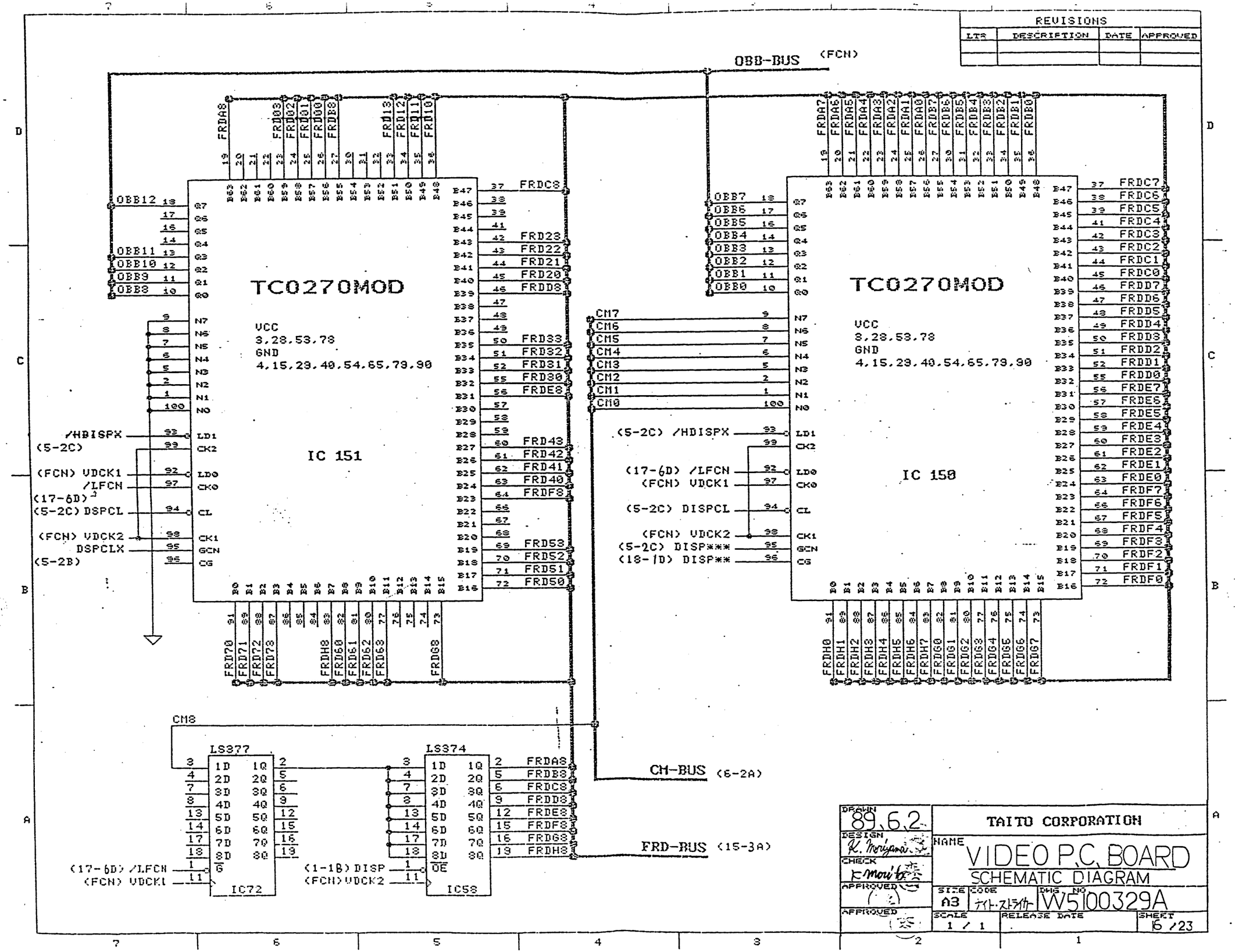

REVISIONS
LTR
DESCRIPTION
DATE
APPROVED
OBB-BUS (FCN)
TC0270MOD
VCC
3,28,53,78
GND
4,15,29,40,54,65,79,90
IC 151
IC 150
/HDISPX
(5-2C)
(FCN) VDCK1
/LFCN
(17-6D)
(5-2C) DSPCL
(FCN) VDCK2
DSPCLX
(5-2B)
(5-2C) /HDISPX
(17-6D) /LFCN
(FCN) VDCK1
(5-2C) DISPCL
(FCN) VDCK2
(5-2C) DISP***
(18-1D) DISP**
CM8
LS377
LS374
IC72
IC58
(17-6D) /LFCN
(FCN) VDCK1
(1-1B) DISP
(FCN) VDCK2
CH-BUS (6-2A)
FRD-BUS (15-3A)
DRAWN 89.6.2
DESIGN K. Moriyama
CHECK K. Moriyama
APPROVED
APPROVED
TAITO CORPORATION
NAME VIDEO P.C. BOARD
SCHEMATIC DIAGRAM
SIZE A3
CODE ナイト・ストライカー
DWG. NO. W5100329A
SCALE 1 / 1
RELEASE DATE
SHEET 16 / 23

REVISIONS			
LTR	DESCRIPTION	DATE	APPROVED

TC0300FLA

VCC
20.40.60.80.100.120.140.160
GND
1.10.30.41.50.59.70.81.90
110.121.130.139.150

IC 149

(2I-4C) /FPLD
/LFCN
(16-7A)(16-3B)(16-7B) (5-4C)
(FCN) /VLD*
(1-1B) /HDPLD
(5-2C) DSPCLX
(FCN) /H-SYNC*
(FCN) VDCK2
(1-1B) OBJCNOFF
(FCN) VDCK0
(1-1B) /OBJCNOFF
(13-2C) COMP-BUS
(2I-5D) FPLD**
HPA2
HPA1
HPA0
HPA-BUS (15-7B)
HPOS-BUS (13-4B)
VPOS-BUS (18-6A)
FRA-BUS (18-1D) (13-6A) (20-7A)
F32
IC 82

DRAWN	TAITO CORPORATION		
89.6.2			
DESIGN K. Moriyama	NAME VIDEO P.C. BOARD		
CHECK K. Morita	SCHEMATIC DIAGRAM		
APPROVED	SIZE A3	CODE ディト・ストライカー	DWG. NO W5100329A
APPROVED	SCALE 1 / 1	RELEASE DATE	SHEET 17 /23

REVISIONS			
LTR	DESCRIPTION	DATE	APPROVED

VP BUS (6-D6)

/LFCN (5-C4)

/FPLD (21-C4)

VOCK2 (FCN)

(17-B1) FRA BUS

(17-A1) VPOS BUS

IC56 LS86 AA11

IC70 LS669

IC71 LS157

IC89 LS174

IC54 LS283

IC55 LS669

IC40 LS283

IC41 LS669

IC88 F74 AA32

DISP*** (5-C2)

DISP*** (21-B1) (16-B3)

VPOS8 VPOS4 VPOS1~VPOS8

(1-C1) /FRAMST

(1-B1) OBJONOFF

+5V GND

DRAWN 89.6.2	TAITO CORPORATION		
DESIGN K. Moriyama	NAME VIDEO P.C. BOARD		
CHECK K. morita	SCHEMATIC DIAGRAM		
APPROVED	SIZE A3	CODE ナイト・ストライカー	DWG NO W5100329A
APPROVED	SCALE 1 / 1	RELEASE DATE	SHEET 8/23

REVISIONS			
LTR	DESCRIPTION	DATE	APPROVED

PD043256 — IC2

FRAA0	18	A0	O0 11 FRDA0
FRAA1	9	A1	O1 12 FRDA1
FRAA2	8	A2	O2 13 FRDA2
FRAA3	7	A3	O3 15 FRDA3
FRAA4	6	A4	O4 16 FRDA4
FRAA5	5	A5	O5 17 FRDA5
FRAV6	4	A6	O6 18 FRDA6
FRAV7	3	A7	O7 19 FRDA7
FRAV8	25	A8	
FRAV9	24	A9	
FRAV10	21	A10	
FRAV11	23	A11	
FRAV12	2	A12	
FRAV13	26	A13	
FRAV14	1	A14	
FRAM3W	27	/WE	
FRAMOE	22	/OE	
FRAMCS	28	/CS	

PD043256 — IC31

FRAC0	18	A0	O0 11 FRDC0
FRAC1	9	A1	O1 12 FRDC1
FRAC2	8	A2	O2 13 FRDC2
FRAC3	7	A3	O3 15 FRDC3
FRAC4	6	A4	O4 16 FRDC4
FRAC5	5	A5	O5 17 FRDC5
FRAV6	4	A6	O6 18 FRDC6
FRAV7	3	A7	O7 19 FRDC7
FRAV8	25	A8	
FRAV9	24	A9	
FRAV10	21	A10	
FRAV11	23	A11	
FRAV12	2	A12	
FRAV13	26	A13	
FRAV14	1	A14	
FRAM2W	27	/WE	
FRAMOE	22	/OE	
FRAMCS	28	/CS	

PD043256 — IC46

FRAF0	18	A0	O0 11 FRDF0
FRAF1	9	A1	O1 12 FRDF1
FRAF2	8	A2	O2 13 FRDF2
FRAF3	7	A3	O3 15 FRDF3
FRAF4	6	A4	O4 16 FRDF4
FRAF5	5	A5	O5 17 FRDF5
FRAV6	4	A6	O6 18 FRDF6
FRAV7	3	A7	O7 19 FRDF7
FRAV8	25	A8	
FRAV9	24	A9	
FRAV10	21	A10	
FRAV11	23	A11	
FRAV12	2	A12	
FRAV13	26	A13	
FRAV14	1	A14	
FRAM4W	27	/WE	
FRAMOE	22	/OE	
FRAMCS	28	/CS	

PD043256 — IC17

FRAG0	18	A0	O0 11 FRDG0
FRAG1	9	A1	O1 12 FRDG1
FRAG2	8	A2	O2 13 FRDG2
FRAG3	7	A3	O3 15 FRDG3
FRAG4	6	A4	O4 16 FRDG4
FRAG5	5	A5	O5 17 FRDG5
FRAV6	4	A6	O6 18 FRDG6
FRAV7	3	A7	O7 19 FRDG7
FRAV8	25	A8	
FRAV9	24	A9	
FRAV10	21	A10	
FRAV11	23	A11	
FRAV12	2	A12	
FRAV13	26	A13	
FRAV14	1	A14	
FRAM6W	27	/WE	
FRAMOE	22	/OE	
FRAMCS	28	/CS	

PD043256 — IC16

FRAB0	18	A0	O0 11 FRDB0
FRAB1	9	A1	O1 12 FRDB1
FRAB2	8	A2	O2 13 FRDB2
FRAB3	7	A3	O3 15 FRDB3
FRAB4	6	A4	O4 16 FRDB4
FRAB5	5	A5	O5 17 FRDB5
FRAV6	4	A6	O6 18 FRDB6
FRAV7	3	A7	O7 19 FRDB7
FRAV8	25	A8	
FRAV9	24	A9	
FRAV10	21	A10	
FRAV11	23	A11	
FRAV12	2	A12	
FRAV13	26	A13	
FRAV14	1	A14	
FRAM1W	27	/WE	
FRAMOE	22	/OE	
FRAMCS	28	/CS	

PD043256 — IC45

FRAD0	18	A0	O0 11 FRDD0
FRAD1	9	A1	O1 12 FRDD1
FRAD2	8	A2	O2 13 FRDD2
FRAD3	7	A3	O3 15 FRDD3
FRAD4	6	A4	O4 16 FRDD4
FRAD5	5	A5	O5 17 FRDD5
FRAV6	4	A6	O6 18 FRDD6
FRAV7	3	A7	O7 19 FRDD7
FRAV8	25	A8	
FRAV9	24	A9	
FRAV10	21	A10	
FRAV11	23	A11	
FRAV12	2	A12	
FRAV13	26	A13	
FRAV14	1	A14	
FRAM3W	27	/WE	
FRAMOE	22	/OE	
FRAMCS	28	/CS	

PD043256 — IC32

FRAF0	18	A0	O0 11 FRDF0
FRAF1	9	A1	O1 12 FRDF1
FRAF2	8	A2	O2 13 FRDF2
FRAF3	7	A3	O3 15 FRDF3
FRAF4	6	A4	O4 16 FRDF4
FRAF5	5	A5	O5 17 FRDF5
FRAV6	4	A6	O6 18 FRDF6
FRAV7	3	A7	O7 19 FRDF7
FRAV8	25	A8	
FRAV9	24	A9	
FRAV10	21	A10	
FRAV11	23	A11	
FRAV12	2	A12	
FRAV13	26	A13	
FRAV14	1	A14	
FRAM5W	27	/WE	
FRAMOE	22	/OE	
FRAMCS	28	/CS	

PD043256 — IC3

FRAH0	18	A0	O0 11 FRDH0
FRAH1	9	A1	O1 12 FRDH1
FRAH2	8	A2	O2 13 FRDH2
FRAH3	7	A3	O3 15 FRDH3
FRAH4	6	A4	O4 16 FRDH4
FRAH5	5	A5	O5 17 FRDH5
FRAV6	4	A6	O6 18 FRDH6
FRAV7	3	A7	O7 19 FRDH7
FRAV8	25	A8	
FRAV9	24	A9	
FRAV10	21	A10	
FRAV11	23	A11	
FRAV12	2	A12	
FRAV13	26	A13	
FRAV14	1	A14	
FRAM7W	27	/WE	
FRAMOF	22	/OE	
FRAMCS	28	/CS	

FRA BUS (17-B1)

FRD BUS (15-A3)(16-A4)

DRAWN	89.6.2	TAITO CORPORATION
DESIGN	K. Moriyama	NAME VIDEO P.C. BOARD
CHECK	K. moriya	SCHEMATIC DIAGRAM
APPROVED		SIZE A3 · CODE ナイト・ストライカー · DWG NO W5100329A
APPROVED		SCALE 1/1 · RELEASE DATE · SHEET 19/23

REVISIONS			
LTR	DESCRIPTION	DATE	APPROVED

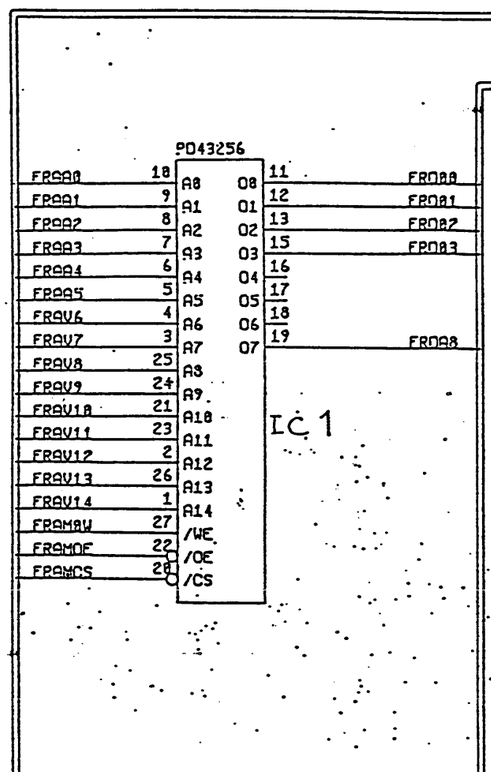

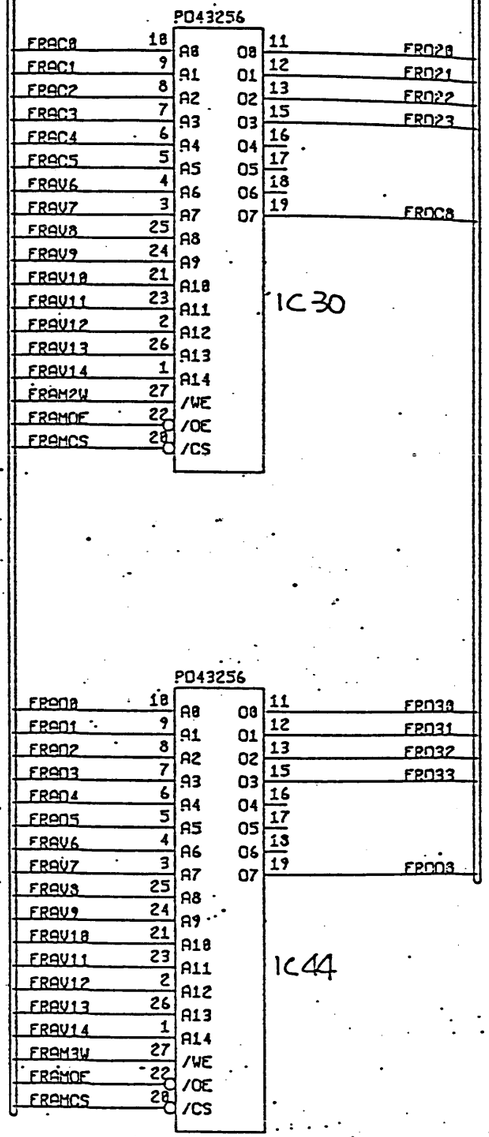

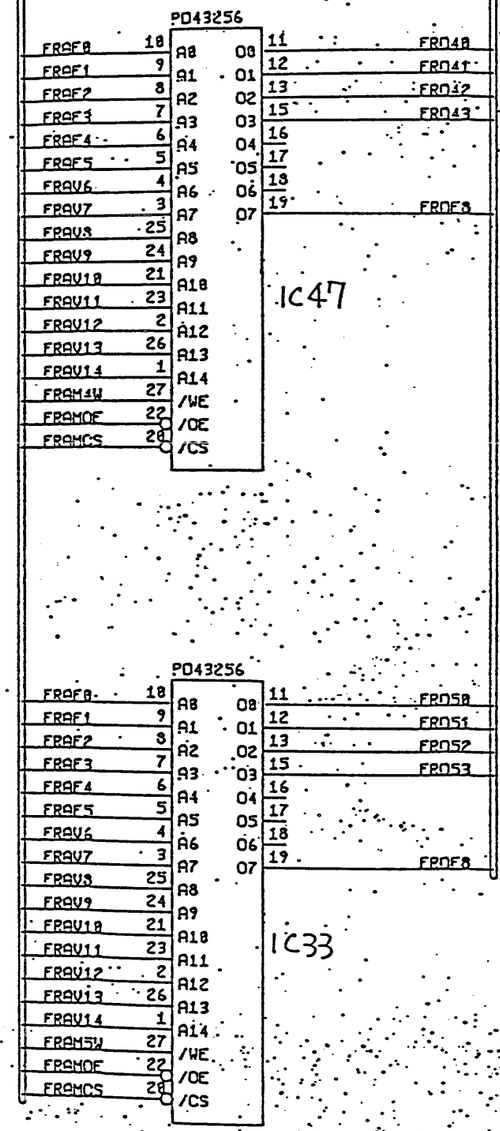

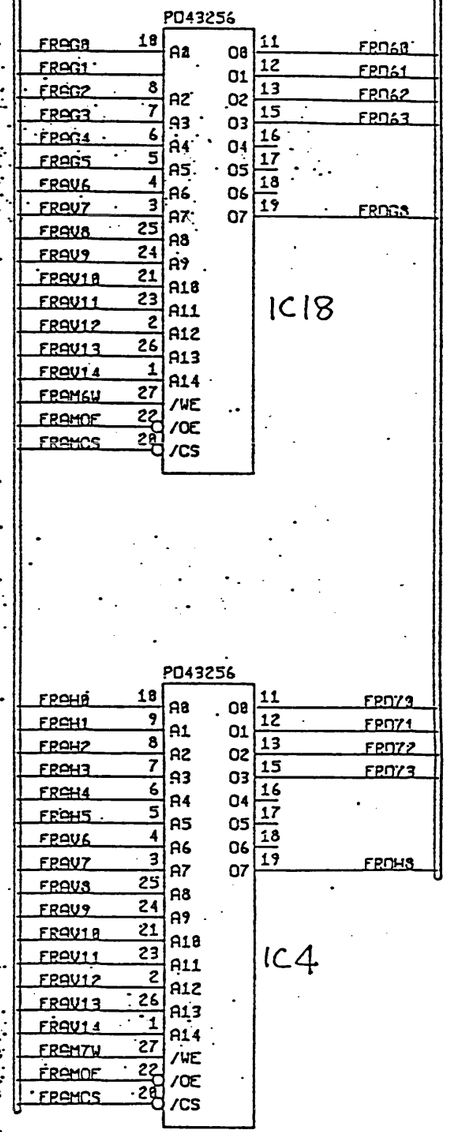

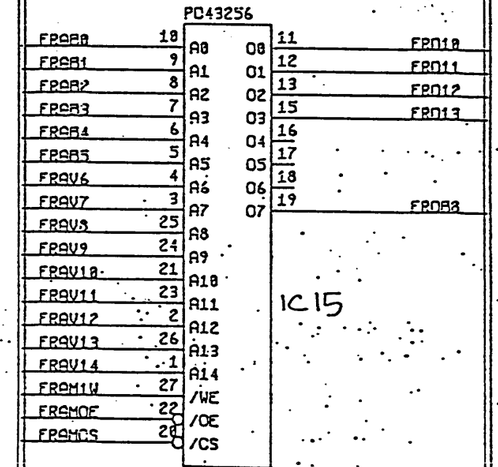

FRA BUS (17-B1)

FRD BUS (15-A3)(16-A4)

DRAWN	'89.6.2	TAITO CORPORATION	
DESIGN	K. Moriyama	NAME	VIDEO P.C. BOARD SCHEMATIC DIAGRAM
CHECK	K. Morita	SIZE / CODE	A3 / ナイトストライカー
APPROVED		DWG. NO.	W5100329A
APPROVED		SCALE	1 / 1
		RELEASE DATE	
		SHEET	20/23

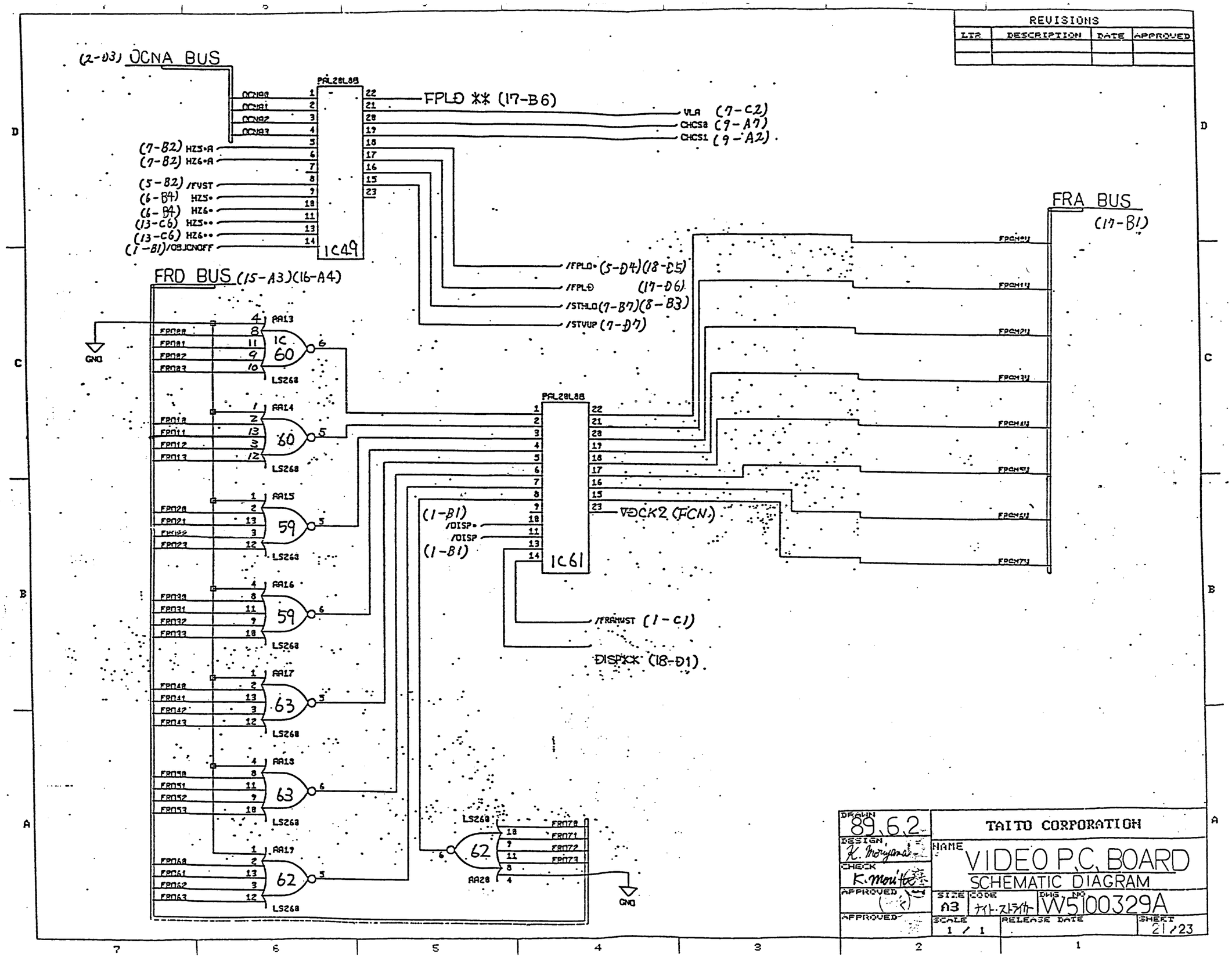
REVISIONS
LTR
DESCRIPTION
DATE
APPROVED
(2-D3) OCNA BUS
PAL28L8B
FPLD ** (17-B6)
VLA (7-C2)
CHCS0 (9-A7)
CHCS1 (9-A2)
(7-B2) HZ5•A
(7-B2) HZ6•A
(5-B2) /FVST
(6-B4) HZ5•
(6-B4) HZ6•
(13-C6) HZ5••
(13-C6) HZ6••
(1-B1) /OBJCNOFF
IC49
FRA BUS
(17-B1)
FRD BUS (15-A3)(16-A4)
/FPLD• (5-D4)(18-D5)
/FPLD (17-D6)
/STHLD (7-B7)(8-B3)
/STVUP (7-D7)
GND
AA13
AA14
AA15
AA16
AA17
AA18
AA19
AA20
IC 60
60
59
59
63
63
62
62
LS268
PAL28L8B
IC61
VDCK2 (FCN)
(1-B1) /DISP•
/DISP
(1-B1)
/FRAMWST (1-C1)
DISPXX (18-D1)
DRAWN 89.6.2
DESIGN K. Moriyama
CHECK K. Moritte
APPROVED
APPROVED
TAITO CORPORATION
NAME VIDEO P.C. BOARD
SCHEMATIC DIAGRAM
SIZE A3
CODE ナイト・ストライカー
DWG. NO. W5100329A
SCALE 1 / 1
RELEASE DATE
SHEET 21/23

REVISIONS			
LTR	DESCRIPTION	DATE	APPROVED

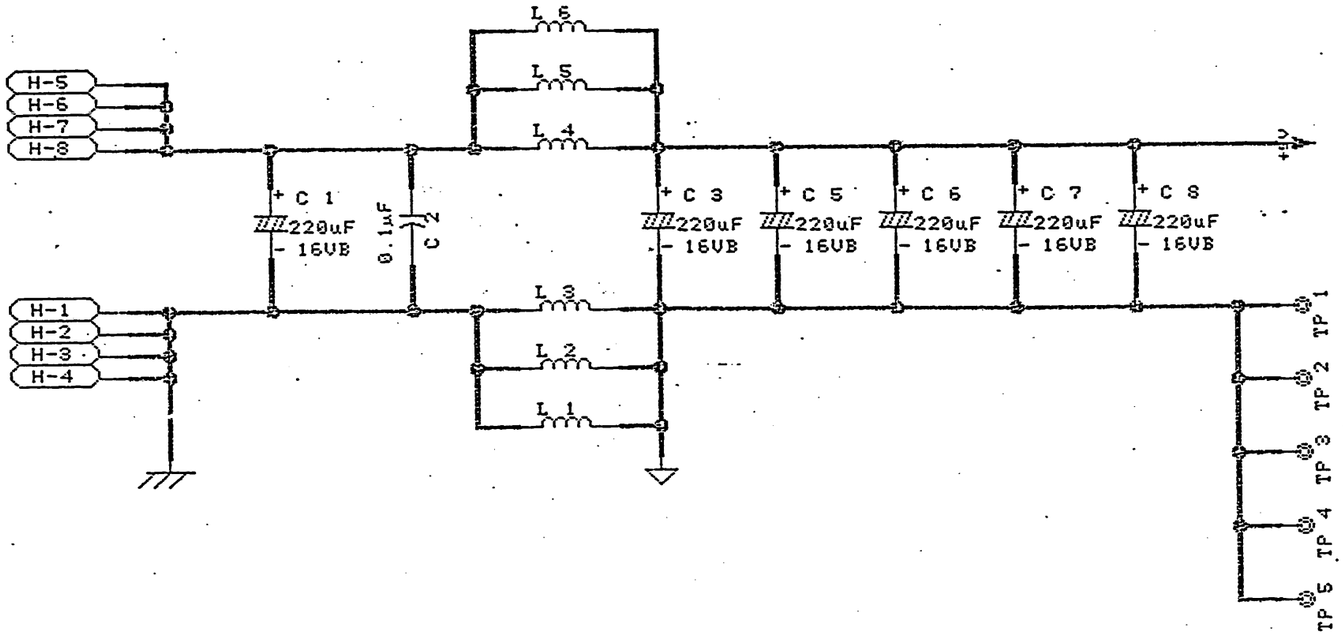

DRAWN 89.6.2	TAITO CORPORATION	
DESIGN K. Moriyama	NAME VIDEO P.C. BOARD	
CHECK K. Morita	SCHEMATIC DIAGRAM	
APPROVED	SIZE A3	CODE ディト・ストライカー
APPROVED	SCALE 1 / 1	RELEASE DATE
	DWG NO W5100329A	SHEET 22 / 23

REVISIONS			
LTR	DESCRIPTION	DATE	APPROVED

E-CONECTER

+5V	E-1	E-2	OD0
+5V	E-3	E-4	OD1
+5V	E-5	E-6	OD2
+5V	E-7	E-8	OD3
+5V	E-9	E-10	OD4
GND	E-11	E-12	OD5
GND	E-13	E-14	OD6
GND	E-15	E-16	OD7
GND	E-17	E-18	OD8
GND	E-19	E-20	OD9
GND	E-21	E-22	OD10
GND	E-23	E-24	OD11
GND	E-25	E-26	OD12
GND	E-27	E-28	OD13
GND	E-29	E-30	OD14
GND	E-31	E-32	OD15
GND	E-33	E-34	OA1
GND	E-35	E-36	OA2
GND	E-37	E-38	OA3
GND	E-39	E-40	OA4
GND	E-41	E-42	OA5
GND	E-43	E-44	OA6
GND	E-45	E-46	OA7
GND	E-47	E-48	OA8
GND	E-49	E-50	OA9
+5V	E-51	E-52	OA10
+5V	E-53	E-54	OR/W
+5V	E-55	E-56	OLDS
+5V	E-57	E-58	OUDS
+5V	E-59	E-60	

F-CONECTER

+5V	F-1	F-2	OBB0
+5V	F-3	F-4	OBB1
+5V	F-5	F-6	OBB2
+5V	F-7	F-8	OBB3
GND	F-9	F-10	OBB4
GND	F-11	F-12	OBB5
GND	F-13	F-14	OBB6
GND	F-15	F-16	OBB7
GND	F-17	F-18	OBB8
GND	F-19	F-20	OBB9
GND	F-21	F-22	OBB10
GND	F-23	F-24	OBB11
GND	F-25	F-26	OBB12
GND	F-27	F-28	
GND	F-29	F-30	VDCK0
GND	F-31	F-32	VDCK1
GND	F-33	F-34	VDCK2
GND	F-35	F-36	VDCK0*
GND	F-37	F-38	
GND	F-39	F-40	/H-SYNC*
GND	F-41	F-42	
GND	F-43	F-44	/HLD*
GND	F-45	F-46	/VLD*
GND	F-47	F-48	
GND	F-49	F-50	
GND	F-51	F-52	
+5V	F-53	F-54	OBJCS
+5V	F-55	F-56	OBJDTA
+5V	F-57	F-58	
+5V	F-59	F-60	

MOLEX 5272-12

H-CONECTER

GND	H-1
GND	H-2
GND	H-3
GND	H-4
+5V	H-5
+5V	H-6
+5V	H-7
+5V	H-8
POST	H-9
	H-10
	H-11
	H-12

DRAWN 89.6.2	TAITO CORPORATION	
DESIGN K. Moriyama	NAME VIDEO P.C. BOARD	
CHECK K Maitake	SCHEMATIC DIAGRAM	
APPROVED	SIZE A3 / CODE テト・ストライカー / DWG NO W5100329A	
APPROVED	SCALE 1 / 1 / RELEASE DATE	SHEET 23/23

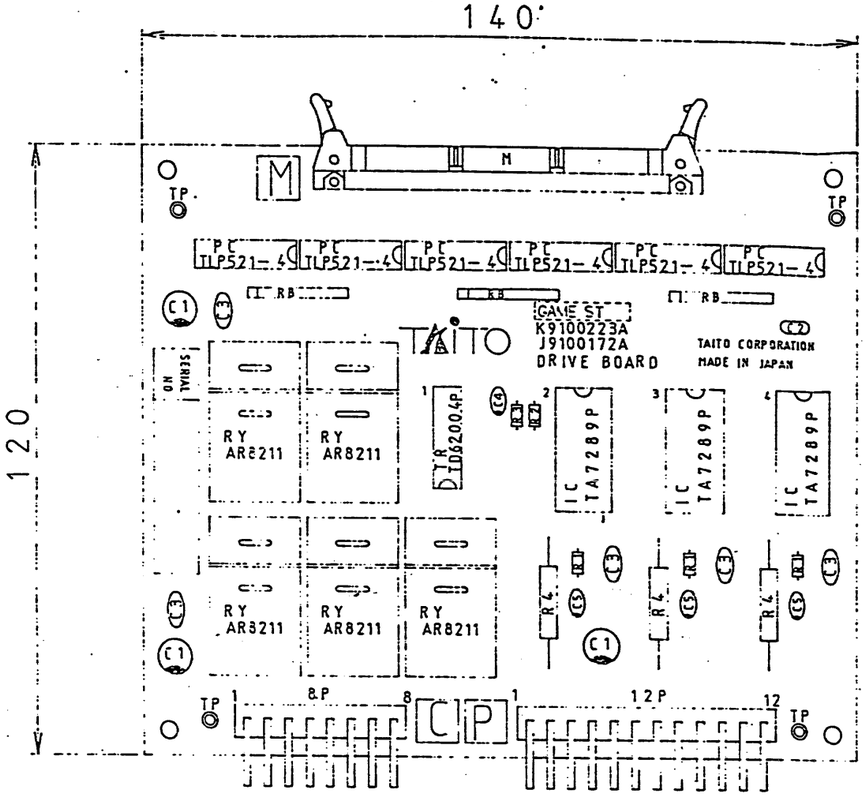

REVISIONS

LTR	DESCRIPTION	DATA	APPROVED

出図 1.6.19 技術課

ITEM NO.	SYM	PART OR IDENTIFYING NO.	NOMENCLATURE OR DESCRIPTION	QTY REQD
54				
53				
52				
51				
50				
49				
48				
47				
46				
45				
44				
43				
42				
41				
40				
39				
38				
37				
36				
35				
34			GAME STICKER (K9100223A)	1
33				
32	TP	C0600403A	TEST POINT CHIP L=7.8	4
31				
30	M	C0510565A	ANGLE PIN HEADER MIL HIF3BA50	1
29	12P	C0500034A	POST HEADER-12P 5272-12 (SIDE)	1
28	8P	C0500030A	POST HEADER-8P 5272-8 (SIDE)	1
27				
26	RY	C0100276A	RELAY AR8211	5
25				
24	IC	B1722761A	MOTOR DRIVER TA7289P	3
23				
22	PC	A9000150A	PHOTO COUPLER TLP521-4	6
21				
20	RB	A2231065A	RES BLOCK 1K 1/8W 8E	3
19				
18	R4	A2212001A	RES OXIDE 1 OHM 3W ±5%	3
17				
16	R3	A2004089A	RES CARBON 10K OHM 1/6W ±5%	1
15	R2	A2004065A	RES CARBON 1K OHM 1/6W ±5%	1
14	R1	A2004048A	RES CARBON 200 OHM 1/6W ±5%	3
13				
12	C5	A1320311A	CAP TANT DIP 16V 2.2μF	3
11	C4	A1320307A	CAP TANT DIP 16V 1μF	1
10				
9	C3	A1200123A	CAP CERAMIC 25V 100000P	5
8				
7	C2	A1100159A	CAP FILM 50V 33000P	1
6				
5	C1	A1000135A	CAP ELEC BLOCK 16V 220μF	3
4				
3	TR	A0100305A	TRANSISTOR ARRAY TD62004P	1
2				
1		J9100172A	DRIVE BOARD 140X120	1

--COMMON MARK
RES_NETWORK
--CATHODE MARK
ELEC_BLOCK
TANT_DIP
CAP_FILM
CAP_CERAMIC

NOTE 1. SYMBOL MARK

DRAWN	6.5.'89
DESIGN	F. Kawai
CHECK	K-Morita
APPROVED	
APPROVED	

TAITO CORPORATION

NAME: DRIVE BOARD ASSY

SIZE	CODE IDENT NO.	DWG. NO.
A2	NIGHT STRIKER	K9100223A

SCALE | RELEASE DATE | SHEET

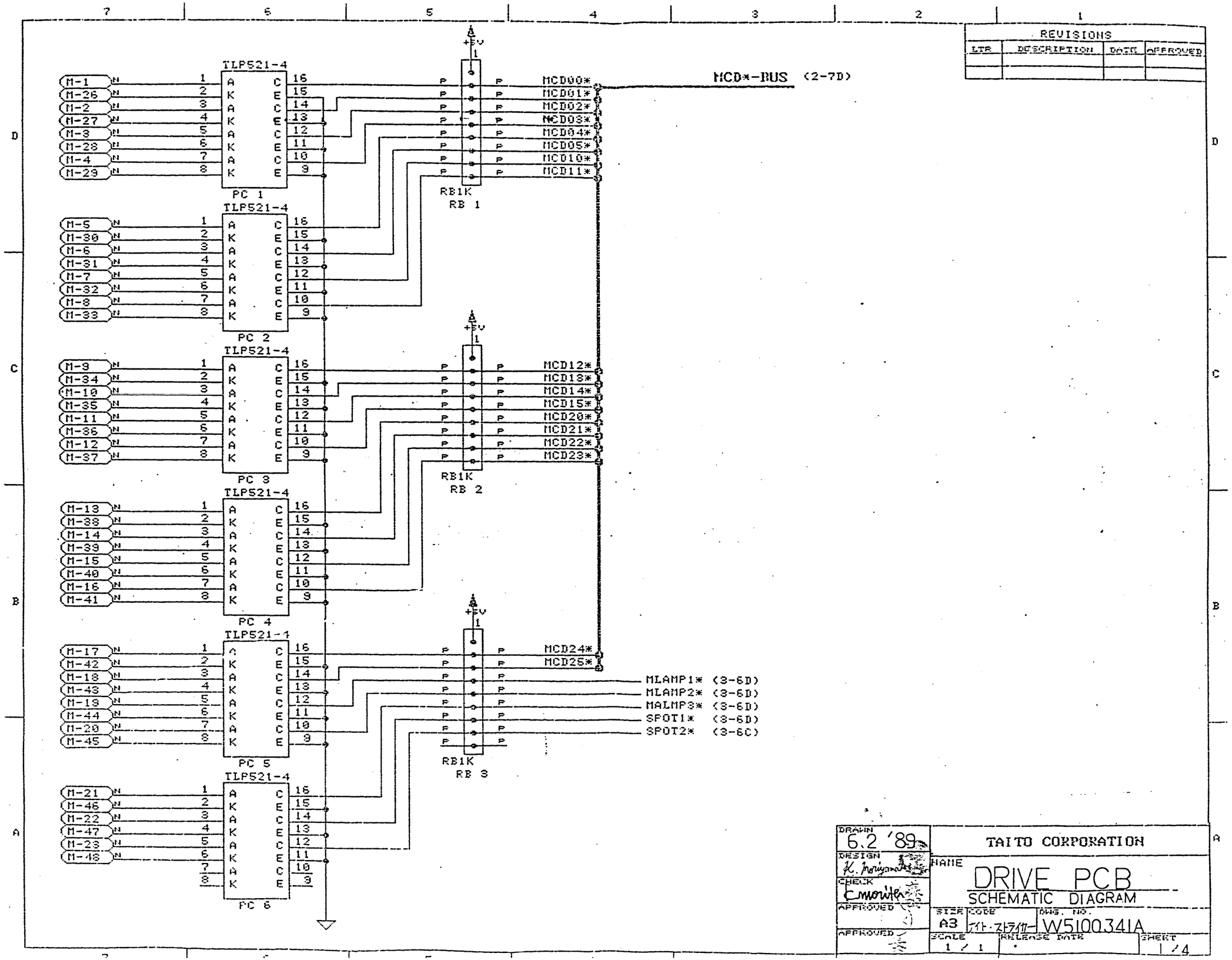

REVISIONS
LTR
DESCRIPTION
DATE
APPROVED
TLP521-4
PC 1
PC 2
PC 3
PC 4
PC 5
PC 6
RB1K
RB 1
RB 2
RB 3
+5V
MCD*-BUS (2-7D)
MCD00*
MCD01*
MCD02*
MCD03*
MCD04*
MCD05*
MCD10*
MCD11*
MCD12*
MCD13*
MCD14*
MCD15*
MCD20*
MCD21*
MCD22*
MCD23*
MCD24*
MCD25*
MLAMP1* (3-6D)
MLAMP2* (3-6D)
MALMP3* (3-6D)
SPOT1* (3-6D)
SPOT2* (3-6C)
DRAWN 6.2 '89
DESIGN K. Moriyama
CHECK
APPROVED
APPROVED
TAITO CORPORATION
NAME
DRIVE PCB
SCHEMATIC DIAGRAM
SIZE A3
CODE ナイト・ストライカー
DWG. NO. W5100341A
SCALE 1 / 1
RELEASE DATE
SHEET 1 / 4

REVISIONS			
LTR	DESCRIPTION	DATE	APPROVED

(1-3D)

MCD*-BUS

MCD00*
MCD01*
MCD02*
MCD03*
MCD04*
MCD05*

IC 2 — TA7289P

3	INA	Vcc	10
2	INB		
11	D0	OUTA	8
12	D1	OUTB	6
13	D2		
14	D3	Vi	7
		NF	5
1	Vref		
4	Cosc	GND	9

N P-1
N P-2
N P-4
N P-5

200Ω R 4 1Ω/3W R 3

C 7 + 2.2uF TANT-

MCD10*
MCD11*
MCD12*
MCD13*
MCD14*
MCD15*

IC 3 — TA7289P

3	INA	Vcc	10
2	INB		
11	D0	OUTA	8
12	D1	OUTB	6
13	D2		
14	D3	Vi	7
		NF	5
1	Vref		
4	Cosc	GND	9

N P-6
N P-7

200Ω R 6 1Ω/3W R 5

C 10 + 2.2uF TANT-

MCD20*
MCD21*
MCD22*
MCD23*
MCD24*
MCD25*

IC 4 — TA7289P

3	INA	Vcc	10
2	INB		
11	D0	OUTA	8
12	D1	OUTB	6
13	D2		
14	D3	Vi	7
		NF	5
1	Vref		
4	Cosc	GND	9

N P-8
N P-9

200Ω R 8 1Ω/3W R 7

C 12 + 2.2uF TANT-

+ C 8 3SUB -220u/E

N P-10
N P-11
N P-12

+5V

10KΩ R 1

1KΩ R 2

333/F C 3

+ C 4 1uF -TANT

DRAWN	6.2 '89	TAITO CORPORATION	
DESIGN	K. Moriyama	NAME	DRIVE PCB
CHECK	K. Morita		SCHEMATIC DIAGRAM
APPROVED		SIZE A3	CODE ライト・ストライカー
APPROVED		DWG. NO.	W5100341A
		SCALE 1 / 1	RELEASE DATE
		SHEET	2/4

REVISIONS			
LTR	DESCRIPTION	DATE	APPROVED

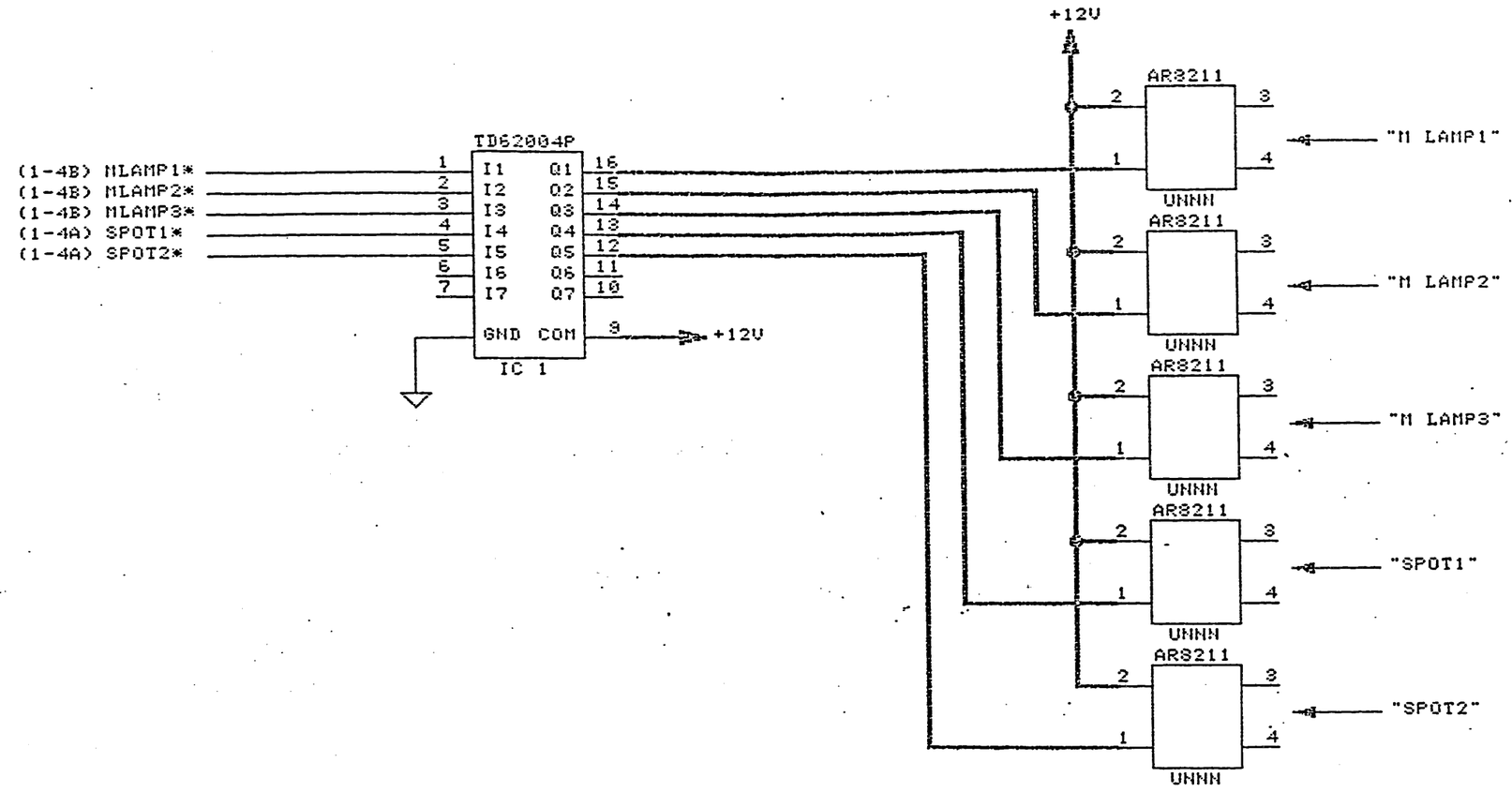

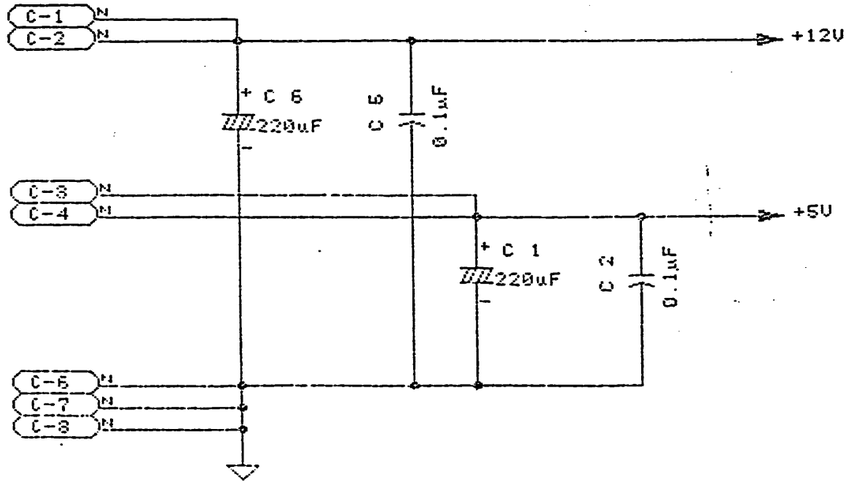

DRAWN 6.2 '89	TAITO CORPORATION		
DESIGN K. Moriyama	NAME DRIVE PCB		
CHECK K. Morita	SCHEMATIC DIAGRAM		
APPROVED	SIZE A3	CODE ナイト・ストライカー	DWG. NO. W5100341A
APPROVED	SCALE 1 / 1	RELEASE DATE	SHEET 3/4

REVISIONS			
LTR	DESCRIPTION	DATE	APPROVED

ANGLE-PINHEADER 50PIN

M - CONNECTOR			
MCD00	1	26	GND
MCD01	2	27	GND
MCD02	3	28	GND
MCD03	4	29	GND
MCD04	5	30	GND
MCD05	6	31	GND
MCD10	7	32	GND
MCD11	8	33	GND
MCD12	9	34	GND
MCD13	10	35	GND
MCD14	11	36	GND
MCD15	12	37	GND
MCD20	13	38	GND
MCD21	14	39	GND
MCD22	15	40	GND
MCD23	16	41	GND
MCD24	17	42	GND
MCD25	18	43	GND
MLAMP1	19	44	GND
MLAMP2	20	45	GND
MALMP3	21	46	GND
SPOT1	22	47	GND
SPOT2	23	48	GND
GND	24	49	GND
GND	25	50	GND

MOLEX 5272-8

C-CONNECTOR	
+12V	1
+12V	2
+5V	3
+5V	4
POST	5
GND	6
GND	7
GND	8

MOLEX 5272-12

P-CONNECTOR	
+24V	1
+24V	2
POST	3
MOTOR1(+)	4
MOTOR1(-)	5
MOTOR2(+)	6
MOTOR2(-)	7
MOTOR3(+)	8
MOTOR3(-)	9
GND	10
GND	11
GND	12

DRAWN 6.2 '89	TAITO CORPORATION		
DESIGN K. Moriyama	NAME DRIVE PCB		
CHECK E Morita	SCHEMATIC DIAGRAM		
APPROVED	SIZE A3	CODE アイト・ストライカー	DWG. NO. W5100341A
APPROVED	SCALE 1 / 1	RELEASE DATE	SHEET 4/4

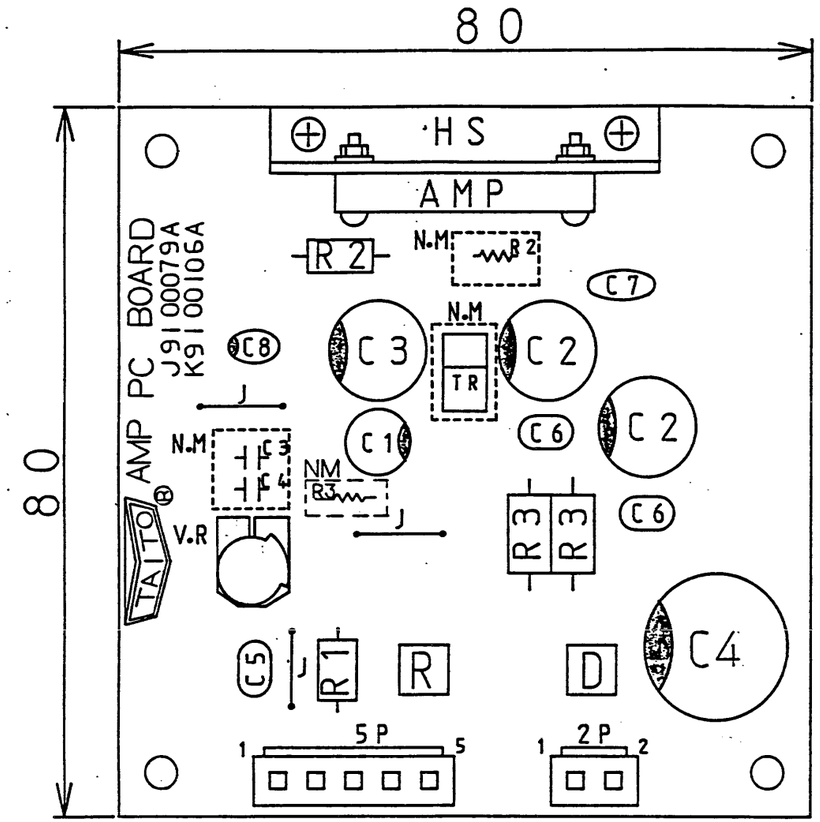

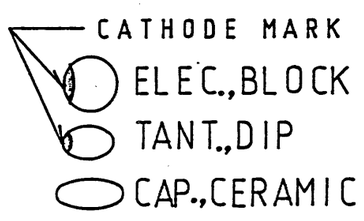

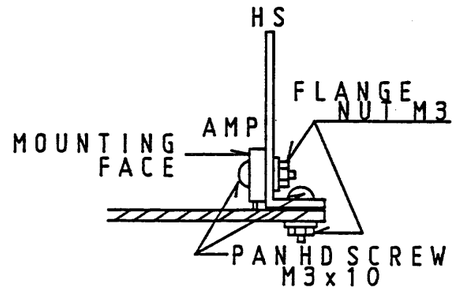

NOTE 1. SYMBOL MARK

NOTE2. HEAT SINK

REVISIONS			
LTR	DESCRIPTION	DATE	APPROVED

ITEM NO.	SYM	PART OR IDENTIFYING NO.	NOMENCLATURE OR DESCRIPTION		QTY REQD
41					
40					
39					
38					
37					
36					
35					
34					
33					
32					
31	J	C0700261A	TINNED COPPER WIRE Ð=0.75		40mm
30					
29	5P	C0500166A	VH POST HEADER TOP 5P		1
28	2P	C0500163A	VH POST HEADER TOP 2P		1
27					
26		P2600006A	FLANGE NUT	M3	2
25		P0600023A	PAN HD SCREW	M3x10	2
24	HS	A9000185A	HEAT SINK PANEL		1
23		P2600006A	FLANGE NUT	M3	2
22		P0600023A	PAN HD SCREW	M3x10	2
21	AMP	B17Z1606A	POWER AMP	MB3731	1
20					
19	VR	A2102411A	VR PSET	B5K	1
18					
17	R3	A2000470A	RES.,CARBON	1OHM 1/2W±5%	2
16	R2	A2000113A	RES.,CARBON	100KOHM 1/4W±5%	1
15	R1	A2000082A	RES.,CARBON	5.1KOHM 1/4W±5%	1
14					
13	C8	A1320319A	TANT.,DIP	16V10	1
12					
11	C7	A1200317A	CAP.,CERAMIC	50V104	1
10					
9	C6	A1100170A	CAP.,FILM	TDY 1H 104	2
8	C5	A1100147A	CAP.,FILM	TDY-1H-103	1
7					
6	C4	A1000194A	ELEC.,BLOCK	25VB2200	1
5	C3	A1000135A		16VB220	1
4	C2	A1000131A		16VB100	2
3	C1	A1000119A	ELEC.,BLOCK	16VB10	1
2					
1		J9100079A	AMP.,PC BOARD		1

PARTS LIST

THIRD ANGLE PROJECTION

UNLESS OTHERWISE SPECIFIED DIMENSIONS ARE IN MILLIMETRES
TOLERANCES
GENERAL ±
HOLE DIA +
ANGLES −

MATERIAL

FINISH

62.9-9 技術課

DO NOT SCALE DRAWING

DRAWN 5.9.87

DESIGN K.Mukae

CHECK 5.12.87 T.Sugawara

APPROVED

APPROVED

TAITO CORPORATION

NAME AMP PC BOARD Assy

SIZE A3 | CODE IDENT NO. MIDNIGHT LANDING | DWG. NO. K9100106A

SCALE | RELEASE DATE | SHEET

REVISIONS			
LTR	DESCRIPTION	DATE	APPROVED

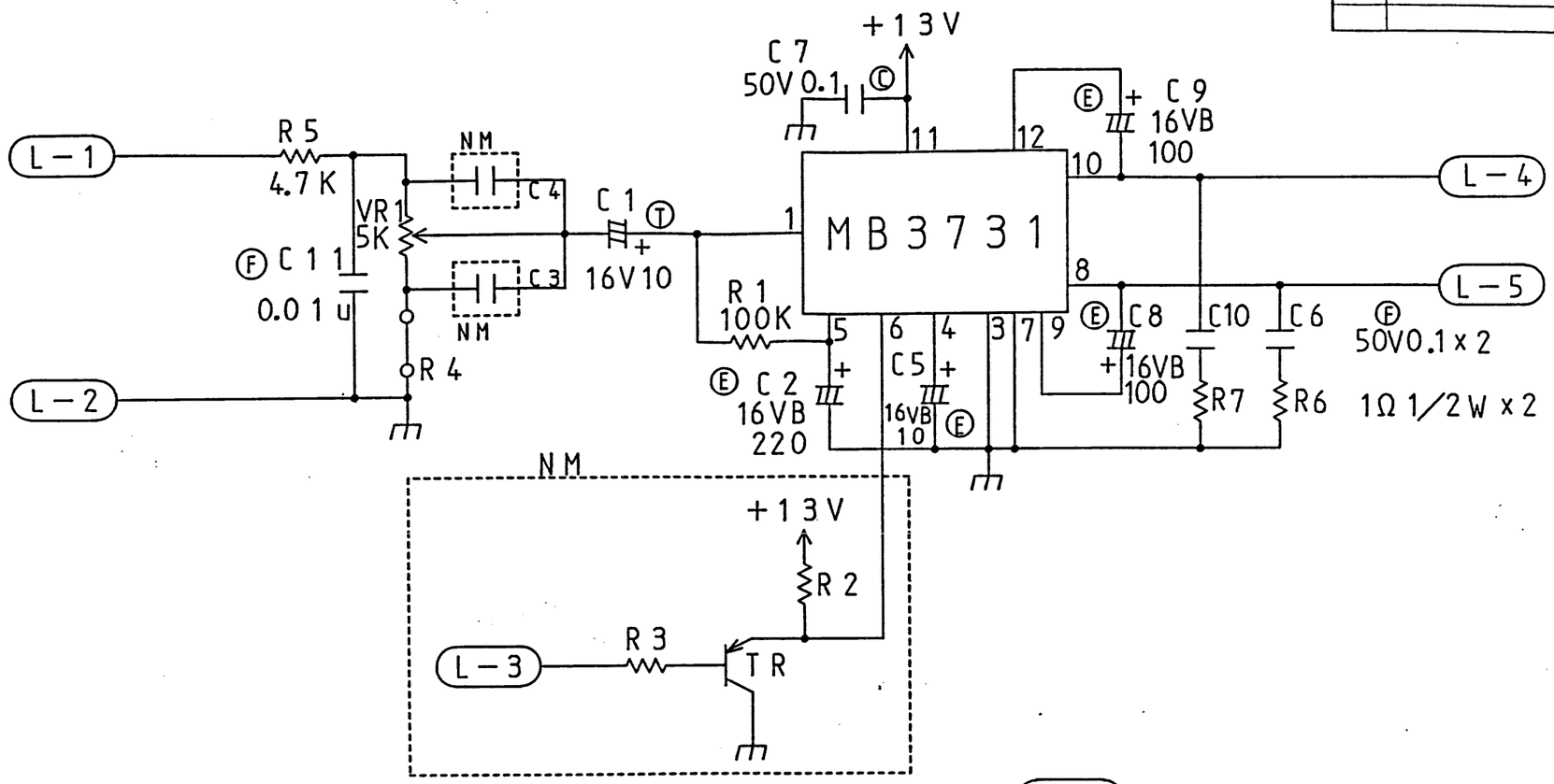

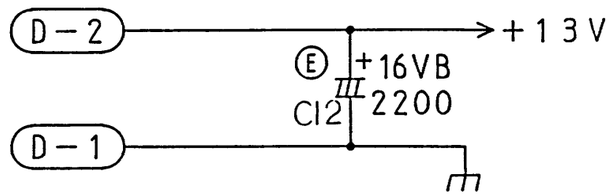

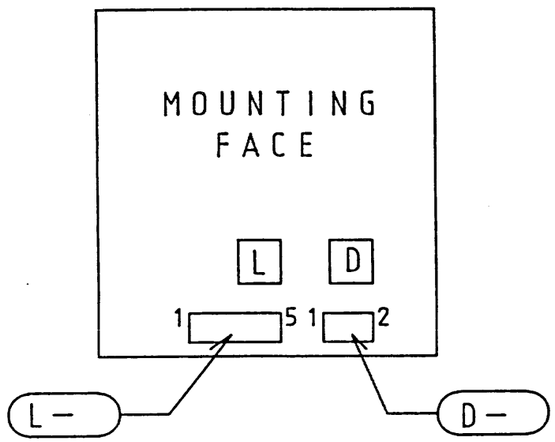

THIRD ANGLE PROJECTION UNLESS OTHERWISE SPECIFIED DIMENSIONS ARE IN MILLIMETRES TOLERANCES GENERAL ± HOLE DIA + − ANGLES ± MATERIAL FINISH DO NOT SCALE DRAWING	DRAWN 5.12.87 DESIGN K. Mukai CHECK 5.12.87 T. Sugawara. APPROVED APPROVED	TAITO CORPORATION NAME AMP PC BOARD SCHEMATIC DIAGRAM SIZE A3 · CODE IDENT NO. MIDNIGHT LANDING · DWG. NO. W5100191A SCALE · RELEASE DATE · SHEET