16-3021-101

Williams®

Service Manual

BLASTER™

- set-up
- operation
- troubleshooting
- logic and schematic diagrams
- parts

CONTENTS

- **CHAPTER 1 Game Setup** **3**
  - Warnings & Notices 5
  - Game Features 5
  - Examine Your Game 6
  - Location of Controls 6
  - Optional Extension Monitor Connections 7

- **CHAPTER 2 Game Operation** **9**
  - Power Turn-On 10
  - Game Operation 10
  - Bookkeeping Totals 10
  - Game Adjustments 11
  - Definitions of Pricing Terms 13

- **CHAPTER 3 Troubleshooting Procedures** **15**
  - Introduction 16
  - Power-Up Tests 16
  - +5VDC Power Supply Adjustments 17
  - Self-Diagnostics 17
  - Diagnostics Mode Tests 18
  - Sound Board Diagnostics 20
  - CMOS RAM Data Test Protocol 22

- **CHAPTER 4 Schematic and Logic Diagrams** **23**

- **CHAPTER 5 Parts** **45**

CHAPTER 1 Game Setup

Warnings and Notices

Game Features

Examine Your Game

Location of Controls

Optional Extension Monitor Connections

Warnings & Notices

WARNING:

1. **FOR SAFETY AND RELIABILITY, WILLIAMS** does not recommend or authorize any substitute parts or modifications of WILLIAMS equipment.

2. **USE OF NON-WILLIAMS PARTS** and modifications of game circuitry may adversely affect game play, or may cause injuries.

3. **SUBSTITUTE PARTS, MODIFICATIONS AND GAME "CONVERSIONS"** may void FCC type-acceptance.

4. **SINCE THIS GAME IS PROTECTED** by Federal copyright, trademark and patent laws, so-called game "conversions" may be illegal under Federal law.

5. **THIS "CONVERSION" PRINCIPLE ALSO APPLIES** to unauthorized facsimiles of WILLIAMS equipment, logos, designs, publications, assemblies and game (or game features not deemed to be in the public domain), whether manufactured with WILLIAMS components or not.

RF INTERFERENCE NOTICE:

CABLE HARNESS PLACEMENTS AND GROUND STRAP ROUTING on this game have been designed to keep RF radiation and conduction within levels accepted by FCC regulation.

TO MAINTAIN THESE LEVELS, reposition harnesses and reconnect ground straps to their original placements if they should be disconnected during maintenance.

CAUTION

FOUR GREEN #18 WIRES Terminate at the power-pack (transformer) assembly chassis D-9886. These wires provide earth ground to the marquee, monitor, switch brackets and PCB-plate mounting bracket. If one of these chassis-ground wires is disconnected during servicing, it must be reconnected to maintain safety standards.

NOTICE:

Assemblies secured to the plastic-upright cabinet use special #8 x 11/16 screws, WILLIAMS part no. 4608-01081-11. Always replace these screws with the same type. NEVER attempt to substitute ordinary sheet-metal screws.

Game Features

FIRST-PERSON ACTION

IN MOST VIDEO GAMES players have to watch a "hero" go through the motions *for them.* Not so in ***BLASTER*** video!

IN *BLASTER* VIDEO players are right there in the action. When they move the joystick, their whole point-of-view changes just as it would in a jet aircraft or in the space shuttle! When they press THRUST the stars, asteroids and interstellar gas clouds *shoot by at death-defying speed.*

BUY-IN FEATURE

CONTINUED GAMES. After completing a game players are encouraged to continue where they left off. (At factory settings upright ***BLASTER*** models even offer continued games at half-price.) Continued games are more challenging than original games. So continued games tend to involve skilled players at the level they prefer and to increase collections.

PLAYERS CHOOSE STARTING DIFFICULTY

FOUR WAYS TO START. Players may begin a game in any of the first four waves: (1) Planetoids; (2) Robot Grid; (3) Saucerland and (4) Vampires. This feature allows players to select the amount of challenge the game will offer, while increasing the game's collection for the operator.

49-WAY OPTO JOYSTICK

MODELED AFTER A MILITARY AIRCRAFT JOYSTICK, the ***BLASTER*** joystick is engineered to fit the hand and provide quick game response as well as durability.

ELECTRONICALLY THE JOYSTICK IS UNIQUE. Six opto-isolators (three on the X-axis and three on the Y-axis) are positioned to accept both direction and speed cues. A resolution of 49 directions and speed combinations is possible. See PLAYER CONTROLS below.

STEREO COCKPIT SOUND

STEREO SOUND. Since "true" stereo requires two sound sources, ***BLASTER*** video has not only two speakers, but two entire sound boards.

Examine your Game

When you receive a new WILLIAMS game, examine it carefully before you power it up. Be sure it was delivered in good condition!

☐ **INSPECT THE OUTSIDE** of the shipping carton and/or game cabinet for shipping damage.

☐ **UPRIGHTS:** Unlock and set aside the top-rear panel. Undo the two trunk latches on the inside of the bottom door. Open the door. Now check circuitry.

☐ **PLASTIC UPRIGHT:** Unlock and open the rear door. Now check circuitry.

☐ **COCKPIT GAMES:** *See Figure 1.* **(1)** Unlock the access door on the front of the game. **(2)** Now extend your arm to the left and right inside the door. Undo the two hood trunk latches. **(3)** Raise the hood. **(4)** Loosen the two access screws at the sides of the circuit board panel. **(5)** Raise the panel and inspect circuitry.

☐ **ARE CONNECTORS SECURELY ATTACHED?** Reconnect any found loose. DON'T FORCE CONNECTORS. They're keyed and only fit one way.

☐ **ARE PLUG-IN CHIPS FIRMLY** seated in their sockets?

☐ **UNWRAP THE POWER CORD** coiled inside the cabinet. *UPRIGHT GAMES:* place the strain-relief plate in the slots as shown in Figure 2. *PLASTIC GAMES:* position the cord in the groove of the cabinet floor. *COCKPIT GAMES:* **Strain-relief provided**the power cord is secured under the front edge of the cabinet below the access door; free the power cord. **Strain-relief not provided** extend the power cord through the hole in the cabinet floor. DON'T PLUG IT IN YET!

☐ **SCRUTINIZE MAJOR SUBASSEMBLIES,** such as the monitor, control panel, transformer chassis and power supply. Make sure they're securely-mounted.

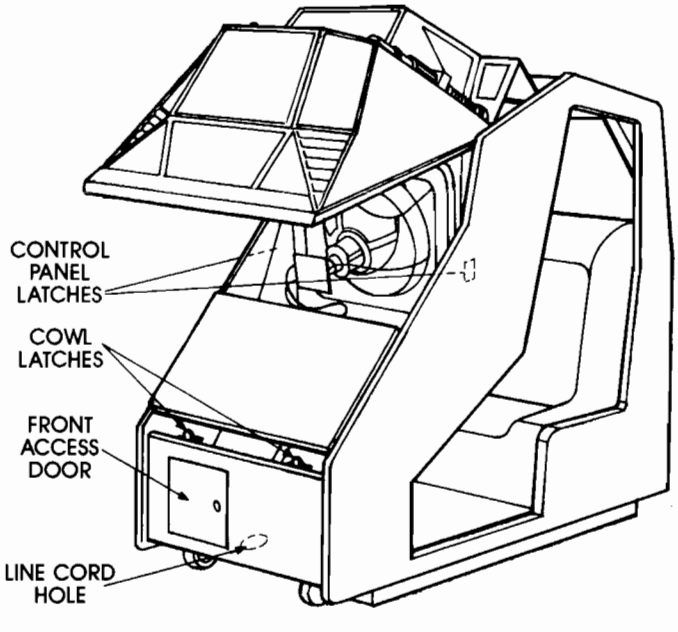

Figure 1. Cockpit model with hood raised.

Location Of Controls

THE ON-OFF SWITCH is located: in the top right corner of the rear of the cabinet *(UPRIGHT)* on the bottom of cabinet below access door *(COCKPIT)* in center over rear door *(PLASTIC)*.

THE POWER INTERLOCK SWITCH is located behind the top-right corner of rear door *UPRIGHT & PLASTIC* inside the access door on the front of the game *COCKPIT.* The interlock switch is a spring-loaded DPDT type that will turn off the game when you open the door. For servicing purposes, pull the switch out and the game will power up.

THE DUAL VOLUME CONTROL is located on the circuit board panel. On uprights and plastic cabinets you can adjust it from the coin door. On cockpits models open the hood to adjust volume.

DIAGNOSTIC SWITCHES are on the inside of the coin door in upright and plastic cabinet games. In cockpit games they're under the hood and on the top-right side as you face the front of the game.

These switches are used to access the Diagnostic-Mode Tests, the BOOKKEEPING TOTALS screen and the GAME ADJUSTMENTS screen. Refer to appropriate sections for information on each of these important features.

MISCELLANEOUS CONTROLS. The *memory-protect interlock switch* is near the diagnostic switch bracket (see above). This switch must be open when you clear BOOKKEEPING TOTALS or make GAME ADJUSTMENTS. It automatically opens when the coin door is open on upright and plastic cabinet games and when the hood is up on cockpit games. The *CPU board reset switch* is located on the CPU board beside the batteries. The *cashbox advance switch,* found inside the cashbox door on all models, allows bookkeeping information to be audited without permitting it to be zeroed. A *sound-board diagnostic switch* is diagonally across each sound board from a large, strap-mounted axial capacitor. Sound-board diagnostics are explained in chapter 3.

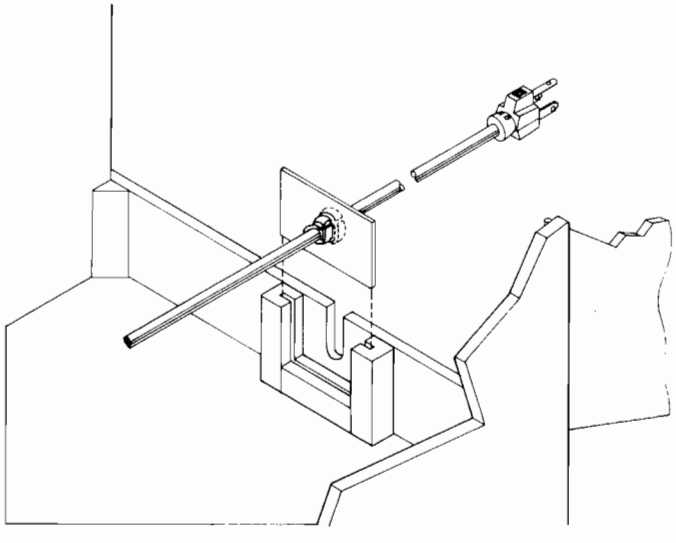

Figure 2. Power Cord Strain Relief (Upright)

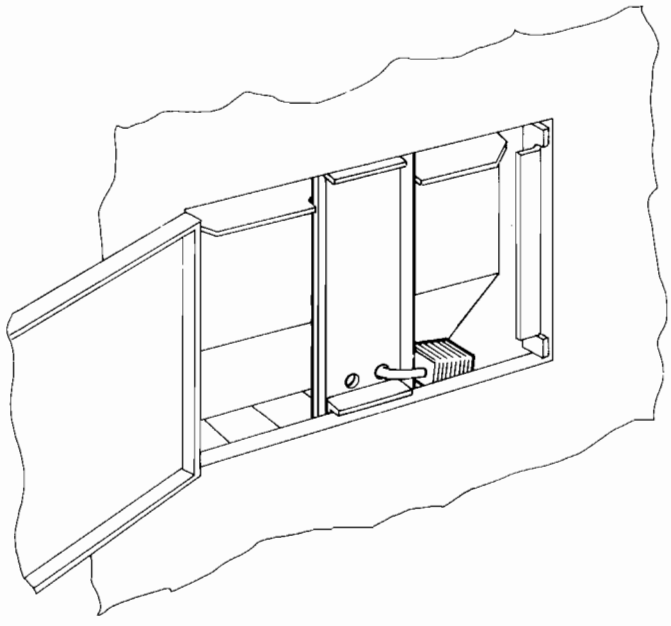

Figure 3. Cockpit Model Cashbox Security Plate

Optional Extension Monitor Installation

An extension monitor must be connected to 115VAC power through a 1:1 isolation transformer. The transformer must have a minimum current rating of 1A. Connections from the WILLIAMS video system to the monitor inputs may simply be paralleled to provide the extension monitor with sync and video.

CAUTION: These monitor connections void the game's FCC certification and UL listings. These may not be restored when the extension monitor is disconnected.

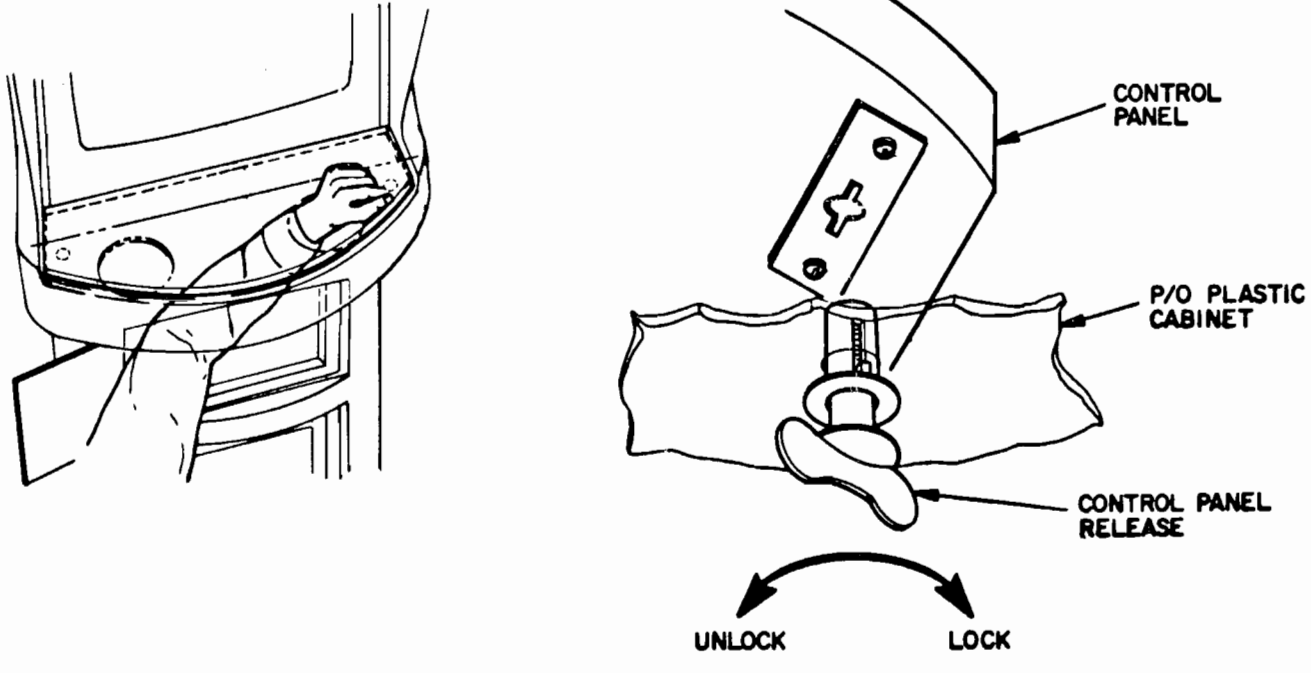

Figure 4. Access to Plastic Cabinet Control Panel

CHAPTER 2 Game Operation

Power Turn-On

Game Operation

Bookkeeping Totals

Game Adjustments

Definitions of Pricing Terms

Power Turn-On

CAUTION: This game must be plugged into a properly-grounded outlet to prevent shock hazard and to ensure proper game operation. DO NOT use a "cheater" plug to defeat the ground pin on the power cord, and DO NOT cut off the ground pin.

WHEN THE GAME IS FIRST TURNED ON general illumination should come on and a moment later a scanning "rug pattern" indicating the RAM test should appear on the screen. Next the rug should become stationary as the ROM test is performed. In a correctly-running game the rug pattern will be followed by the message "INITIAL CHECKS INDICATE OPERANTIONAL". If RAM or ROM failure messages come up on the screen instead, refer to Power-Up Tests in TROUBLESHOOTING PROCEDURES.

Game Operation

GAME START

INSERT COINS; The number of COINS RECEIVED is displayed on the CRT. With four or more coins displayed, pressing 2-PLAYER START initiates a 2-player, 3-turn game (adjustable feature).

PLAYER CONTROLS

CONTROLLED BY THE JOYSTICK, a unique configuration of optoswitches provides a faster response and a greatly-increased number of vectors in each quadrant for the precise aiming of your spaceship.

TWO SETS OF THREE OPTOSWITCHES each are arranged at right angles to each other. One set is for aiming along the X-axis; the other is for aiming along the Y-axis. With the joystick in the center position all six optoswitches are blocked.

AS THE JOYSTICK IS MOVED it actuates one or both sets of switches. The spaceship responds with extraordinary precision due to the sequential action of the optoswitches in each set. Each switch in the set is offset so that joystick action multiplies the circuitry brought in by the switches, increasing the precision aiming of the spaceship.

THE RATE OF X-Y COURSE CHANGE INCREASES as the joystick is moved further from the center position; it decreases as the joystick is returned toward the center position.

SPECIAL CIRCUITRY is included so the spaceship can respond immediately to sudden reversals of joystick movement.

PRESS BLAST! The spaceship fires at planetoids and enemies.

PRESS THURST! The spaceship accelerates to maximum speed.

GAME PLAY

IN A VALIANT SPACESHIP the player defies space and time while vying with robots, vampires, cat fighters and other fearsome foes. The player must BLAST enemies or stay out ot their way to protect his shields (and his turn). A shield may be hit three times before it disintegrates. **GAME ACTION IS DIVIDED INTO WAVES.** Each wave may have one or several goals. Some of the more-important goals are to...

- ☐ BLAST enemies and planetoids (fleet bonus for eliminating all of one type)
- ☐ pick up spacemen (in time tunnel or space)
- ☐ dock with energizer E's (restores shields)
- ☐ BLAST the red saucer first or last (at Saucerland)
- ☐ fly through the magic arches (on the Robot Grid)
- ☐ attain wave 30 to enter astral paradise

BAD GUYS

- android
- cat fighter
- death rider
- destroyer
- enduro
- master mind
- planetoids
- red saucer
- runaway ship
- saucer
- space cowboy
- space robot
- star cruiser
- vampire
- X-29 fighter

Bookkeeping Totals

ENTERING BOOKKEEPING MODE. See Figure 5. Inside the coin door (or under the hood on cockpit-model games) is a bracket with three button switches. Set the AUTO-UP/MANUAL-DOWN (center) switch to AUTO-UP. Press the ADVANCE switch to display BOOKKEEPING TOTALS on the screen (Figure 3). Now check those totals. Here's what to look for...

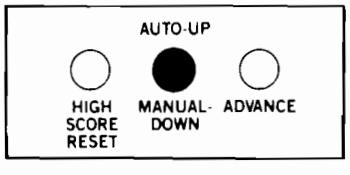

Figure 5. Diagnostic Button Switches

BOOKKEEPING TOTALS SHOW YOU AT A GLANCE if game settings are bringing you a satisfactory return on your investment! *Only games by WILLIAMS ELECTRONICS have this feature.* Think of it as a unique way to keep your ***BLASTER*** game the *leader of the pace when it comes to earnings...* location after location, week in and week out!

ENTERING BOOKKEEPING MODE. See Figure 5. Inside the coin door (or under the tabletop on cocktail-model games) is a bracket with three button switches. Set the AUTO-UP/MANUAL-DOWN (center) switch to AUTO-UP. Press the ADVANCE switch to display BOOKKEEPING TOTALS on the screen (Figure 6). Now check those totals. Here's what to look for...

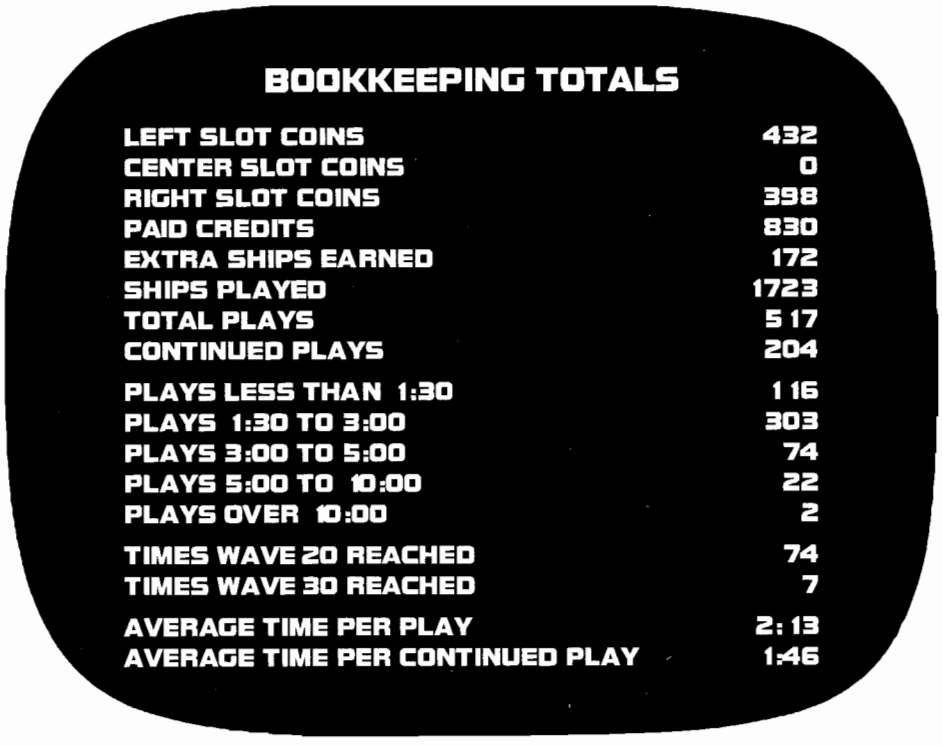

Figure 6. Bookkeeping screen

AVERAGE TIME PER PLAY: TWO MINUTES. Your most important figure on the BOOKKEEPING TOTALS screen is AVERAGE TIME PER PLAY. You'll want to pay special attention to this figure every day for this reason: Thorough field and factory research has shown that *two-minute games both satisfy players and also keep the quarters flowing.*

If games aren't running about two minutes long, then collections probably aren't at their peak. *But...is someone throwing the average off?* Now you can check. Because ***BLASTER*** video even tells you how many people played at each of five skill (time) levels. Most of them should be grouped at PLAYS 1:30 to 3:00. How many players reached upper waves? ***BLASTER*** video even lets you know this! These features help you tailor your game to your game-playing public. It's easy. But *only WILLIAMS games let you do it!*

Game Adjustments

ANOTHER EXCLUSIVE IN WILLIAMS GAMES! No other brand of games permits such a broad range of GAME ADJUSTMENTS. Without expensive "speed-up kits" or risky modifications you can make BLASTER play to your advantage...whatever your location needs may be. This feature makes BLASTER video a very *versatile performer.* And it means that ***BLASTER*** video has *phenomenal staying power!* Now here's the secret...

USE THE DIAGNOSTIC SWITCHES. With the AUTO-UP/MANUAL-DOWN switch set to AUTO-UP press the ADVANCE switch twice. The GAME ADJUSTMENTS screen will come up (See Figure 7. Factory settings are shown there).

Now for the multiple choice section! *Choose one or more:*

☐ Use the BLAST (longer game) and THRUST (shorter game) buttons to choose the appropriate difficulty level (0 = *easiest* or extra liberal, 4 = *average*, 9 = *hardest* or extra conservative).

☐ For a shorter game, increase the bonus points figure (EXTRA SHIP EVERY) or set it to zero. For a longer game, reduce it. (50,000 = long/200,000 = short).

☐ For a shorter game, decrease the number of TURNS PER PLAYER. For a longer game, increase the number. (1 = short/20 = long).

SET ATTRACT MODE MESSAGE

1. Move the cursor to SET ATTRACT MODE MESSAGE.
2. Press BLAST.
3. Press ADVANCE.
4. Enter up to two lines of your message by following instructions on the screen.
5. Press ADVANCE to enter Game-Over Mode.

To restore the WILLIAMS attract-mode message, perform steps 1 through 3 and then turn the game off and back on.

Figure 7. Adjustments screen showing factory settings for upright games

NOTE: Factory settings vary on the function CREDITS REQUIRED TO CONTINUE GAME. Upright games are set to 1. Cockpit games have a ROM-board jumper providing a 2.)

LETTERS FOR HIGHEST SCORE NAME

The number of letters allowed the highest-scoring player for entering his name can be varied from 3 to 20 and is recommended as 20. If objectionable words are entered as the signature name, you can change the lettered entry leaving the highest score the same. See SETTING HIGHEST SCORE NAME.

RESTORE FACTORY SETTINGS

1. Move the cursor to RESTORE FACTORY SETTINGS.
2. Press BLAST.
3. Press ADVANCE twice.

CLEAR BOOKKEEPING TOTALS

1. Move the cursor to CLEAR BOOKKEEPING TOTALS.
2. Press BLAST.
3. Press ADVANCE twice.

HIGH SCORE TABLE RESET

1. Move the cursor to HIGH SCORE TABLE RESET.
2. Press BLAST.
3. Press ADVANCE to enter Game-Over Mode.

AUTO CYCLE

This adjustment is actually a troubleshooting procedure. See Chapter 3.

1. Move the cursor to AUTO CYCLE.
2. Press BLAST to display a "YES".
3. Press ADVANCE to enter Auto-Cycle Mode. The coin door or hood must remain open for this test.
4. To exit Auto-Cycle Mode, turn the game off and on.

SET HIGHEST SCORE NAME

1. Move the cursor to SET HIGHEST SCORE NAME.
2. Press BLAST.
3. Press ADVANCE.
4. Enter the new signature.
5. Press ADVANCE to enter Game-Over Mode.

An alternate, simpler method enters the factory highest-score signature. In the Game-Over Mode hold down the HIGH SCORE RESET button. After a few seconds a sound is produced and the factory highest-score signature is activated.

Table 1. Game Pricing

Coin Door Mechanism	Credits/ Money	Pricing Selection	Left Slot Units	Center Slot Units	Right Slot Units	Units Per Credit	Units Req'd For Bonus Credit	Min. Units For Any Credit
Twin Quarter	1/25¢, 5/$1	0	1	4	1	1	4	0
Quarter, Dollar,	2/50¢, 5/$1	0	1	4	1	1	4	2
Quarter	**•1/25¢, 4/$1**	**3**	**1**	**4**	**1**	**1**	**0**	**0**
	2/50¢, 4/$1	0	1	4	1	1	0	2
	1/50¢, 3/$1, 4/$1.25	0	3	12	3	4	15	0
	1/50¢, 3/$1, 7/$2	0	12	48	12	14	96	24
1DM, 5DM	**•2/1DM, 12/5DM**	**5**	**12**	**0**	**2**	**2**	**0**	**0**
	•1/1DM, 6/5DM	**2**	**6**	**0**	**1**	**1**	**0**	**0**
20-Cent, 50-Cent	1/20¢, 3/50¢	0	6	0	15	5	0	0
1 Franc, 5 Franc	**•1/2F, 3/5F only**	**4**	**1**	**16**	**6**	**2**	**0**	**0**
25 Cent,	**•1/25¢, 4/1G**	**6**	**1**	**0**	**4**	**1**	**0**	**0**
1 Guilder	1/25¢, 5/1G	0	1	0	4	1	4	0
5 Franc	**•1/5F, 2/10F**	**7**	**1**	**0**	**2**	**1**	**0**	**0**
10 Franc	**•1/10F**	**8**	**1**	**0**	**2**	**2**	**0**	**0**
1 Franc, 2 Franc	**•2/1F, 5/2F**	**2**	**6**	**0**	**1**	**1**	**0**	**0**
100 Lire, 200 Lire	**•1/200 Lire**	**8**	**1**	**0**	**2**	**2**	**0**	**0**
Twin Coin	**•1/1 Coin**	**3**	**1**	**4**	**1**	**1**	**0**	**0**
	•1/2 Coins	**5**	**1**	**4**	**1**	**2**	**0**	**0**
	1/2 Coins, ¾ Coins	1	1	4	1	2	4	0
	1/3 Coins, 2/5 Coins	0	2	0	2	5	0	0
1-Unit, 5-Unit	**•1/2, 3/5**	**4**	**1**	**16**	**6**	**2**	**0**	**0**
	1/1, 5/5	0	1	0	5	1	0	0
	1/3, 2/5	0	2	0	10	5	0	0
Any	**•Free Play**	**9**	**1**	**4**	**1**	**1**	**0**	**0**

Definitions of Pricing Terms

CREDITS REQUIRED TO START GAME permits one or more credits to equal one game. Factory settings place a...

- "2" in the CREDITS REQUIRED TO START GAME function

CREDITS REQUIRED TO CONTINUE GAME lets you offer players a price-incentive when they continue games. The factory setting is:

- "1" in the CREDITS REQUIRED TO CONTINUE GAME function

This "1" means that players (who paid 50 to initiate their first game) may continue playing for only 25.

PRICING SELECTION allows a shorthand method of setting the pricing functions. If a number from one to nine is entered into the PRICING SELECTION function, a corresponding standard setting (shown in bold type in Table 1 above) will be entered into the game. The rest of the pricing functions are automatically set for that standard.

THE NUMBER OF CREDITS PER COIN is equal to the number of SLOT UNITS for any one slot divided by the number of UNITS PER CREDIT. If the number of LEFT SLOT UNITS equals X and the number of UNITS PER CREDIT equals Y, then the number of credits per coin is X/Y. With factory settings X is "1" and Y is "1". Players receive a credit for a quarter.

UNITS REQUIRED FOR BONUS CREDIT is the number of games that must be purchased before a free game is awarded.

MINIMUM UNITS FOR ANY CREDIT is the least number of coins allowed per credits or credits: Or put another way, the MINIMUM UNITS FOR ANY CREDIT determines the smallest number of whole credits that may be paid for at one time.

For example if you want to allow one credit for a quarter but wish to encourage multiple game-playing, you may enter:

- "0" in the PRICING SELECTION function

This zero value automatically sets all pricing functions. However minimum units for any credit must be raised to "2" or

a higher value to achieve your goal. Here are the rest of the functions as they should appear.

- "1" in the LEFT SLOT UNITS function
"4" in the CENTER SLOT UNITS function
"1" in the RIGHT SLOT UNITS function
"1" in the UNITS PER CREDIT function
"0" in the UNITS REQUIRED FOR BONUS CREDIT function
"2" in the MINIMUM UNITS FOR ANY CREDIT function

These values allow one credit for a quarter, but ONLY when two or more credits are paid for at a time. Incidentally, the "4" in CENTER SLOT UNITS allows four credits per dollar coin (center slot only). See "2/50, 4/$1" in Table 1 above.

GAMES : PRICES ratio to *start a game* is equivalent to the ratio:

X : VYS
where :
X = SLOT UNITS
V = COIN VALUE
Y = UNITS PER CREDIT
S = CREDITS REQUIRED TO START GAME

For example, at factory settings with quarter chutes the variables produce 1 : 25x1x2 or one starting game for 50¢

GAMES : PRICE ratio to *continue a game* is equivalent to the ratio:

X : VYC
where:
X = SLOT UNITS
Y = UNITS PER CREDIT
C = CREDITS REQUIRED TO CONTINUE

For example, at factory settings for upright and plastic cabinet games the variables produce 1 : 25x1x1 or one continued game for 25¢.

CHAPTER 3 Troubleshooting Procedures

Introduction

Power-Up Tests

+5VDC Power Supply Adjustments

Self-Diagnostics

Diagnostic Mode Tests

Sound Board Diagnostics

CMOS RAM Data Test Protocol

INTRODUCTION

Certain types of game malfunctions may inhibit the game's diagnostic or display faculties. Troubleshooting procedures for most of these types of malfunctions as well as malfunctions that permit self-diagnosis are covered below. Our trouble-shooting algorithm begins with *Power-Up* and continues until *Game-Over Mode*. All procedures can be performed with minimal test equipment or merely by observing the game itself.

POWER-UP TESTS

NO GENERAL ILLUMINATION

(1) Check fuse F2 on power supply board.

(2) Check for proper installation of jumpers W1, W2, W3 and/or resistor R27. (Some machines MAY NOT have an R27. Refer to your drawing set.)

(3) Check 4P1/J1, 4P3/J3, 6P2/J2 and 6P3/J3.

(4) If all the above don't turn up the problem, check power supply board.

NO INITIAL VIDEO (RUG PATTERN)

(1) Press reset button on CPU Board.

(2) Try RAM and ROM tests (see below).

(3) If all the above don't turn up the problem, check power supply board.

CHECKING POWER SUPPLY BOARD

(1) Swap power supply board with one from known-good game.

(2) If game plays, problem is on power supply board.

(3) If game doesn't play, check power transformer with voltmeter.

(4) If known-good power supply is unavailable for tests above, check +5V, –5V and +12V outputs on power supply in game. Each MUST BE within 2% of rated output with less than 0.1% AC hum.

MORE POWER-UP TESTS

TEST	ROM BOARD LEDS RECOGNIZE CONDITION	ROM BOARD LEDS IDENTIFY BAD CHIPS	VIDEO	REMEDY
GENERAL	"0" means all power-up tests passed	—	(1) scanning rug pattern (2) stationary rug pattern (3) "INITIAL TESTS INDICATE ALL SYSTEMS OPERATIONAL" (4) Game-Over Mode	If any video (see left) is missing or error message is displayed, proceed to **Diagnostic Mode** tests.
CMOS (See Appendix A)	"0" means tests passed	—	"HIGH SCORE TABLE RESET" "BOOKKEEPING TOTALS CLEARED" "ADJUSTMENT FAILURE" "RESTORE FACTORY SETTINGS BY OPENING FRONT DOOR OR HOOD AND TURNING GAME ON AND OFF"	(1) Open coin door or hood and turn power off and on.
	"0" means tests passed	—	"FACTORY SETTINGS RESTORED"	(2) Press ADVANCE. Game should return to Game-Over Mode.
BATTERY (See Appendix A)	"0" means tests passed	—	"HIGH SCORE TABLE RESET" "BOOKKEEPING TOTALS CLEARED" "ADJUSTMENT FAILURE" "RESTORE FACTORY SETTINGS BY OPENING FRONT DOOR OR HOOD AND TURNING GAME ON AND OFF"	(1) Open coin door or hood and turn power off and on. Or: press ADVANCE. In either case, game should return to Game-Over Mode. (2) Check AA alkaline cells on CPU Board. (3) If problem persists, proceed with CMOS RAM test by putting the game into its **Diagnostic Mode *(see Self-Diagnostics).***
MEMORY PROTECT INTERLOCK (See Appendix A)	"0" means tests passed	—	"HIGH SCORE TABLE RESET" "BOOKKEEPING TOTALS CLEARED" "ADJUSTMENT FAILURE" "RESTORE FACTORY SETTINGS BY OPENING FRONT DOOR OR HOOD AND TURNING GAME ON AND OFF"	(1) Making and breaking memory protect interlock switch, check with VOM and replace if faulty. (2) Replace if faulty: Memory protect gates U56, U57, U59, Q1 or CMOS RAM U38.
SPECIAL CHIP	"0" means tests passed	—	(1) scanning rug pattern (2) blank screen instead of "INITIAL TESTS INDICATE ALL SYSTEMS GO" (3) high score table with no scores (4) intro blank or program crash	(1) Turn power off. (2) To find bad chip, replace 2 special chips one at a time with known good chips. (3) Turn machine on after each replacement and run through Power-Up Tests.

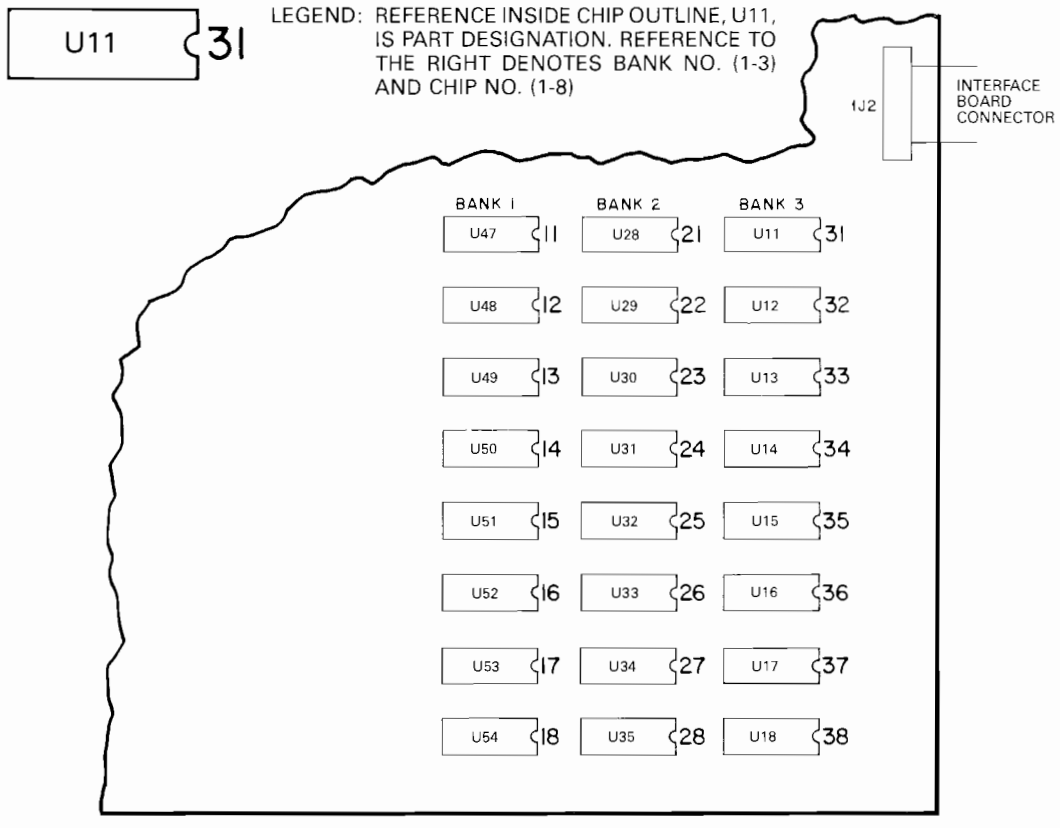

Figure 8. RAM Location and Numbering on CPU Board & ROM Board RAMS

+5VDC Power Supply Adjustments

BEFORE ADJUSTING THE VOLTAGE OUTPUT, always check at the output of the supply for AC hum. This hum should never rise above .005V on the +5VDC supply. If it doesm consult your schematic drawing set for proper DC voltages throughout the circuit. Test for these with the DC setting of your multimeter. Make a second check using the AC setting. Pay particular attention to readings at TP5 (top of capacitor C10). If the voltage here is low (less than +11VDC) or if you find excessive ripple (more than 700mVrms), replace the capacitor.

If TP1 is less than +4.95VDC, then check precision resistors R25 and R26. If they are within the 1% tolerance, then check IC2.

Self-Diagnostics

If RAM or ROM failure messages are displayed on the CRT after the "rug pattern" proceed with self-diagnostics. Self-diagnostic procedures are controlled by the AUTO-UP/MANUAL-DOWN switch to the MANUAL-DOWN position and depress the ADVANCE pushbutton. The game is now in its Diagnostic Mode and a ROM test is performed. With ROM test results present on the CRT display, set the AUTO-UP/MANUAL-DOWN switch to the AUTO-UP position. Depressing the ADVANCE pushbutton initiates the RAM test.

Further tests (CMOS, sounds, switch, color RAM and monitor test patterns) are initiated as the ADVANCE pushbotton is depressed (once more for each subsequent test).

MONITOR TEST PATTERNS ("19" Wood Cabinet Upright Games only). For ease in adjustments, the monitor may be slid back and the svreen viewed in the CRT mirror on the inside-top of the cabinet. Remove the two bolts and carefully slide the monitor back in its shelf. Secure the monitor in the extended position by inserting the two bolts through holes provided at the left side of the monitor.

AUTO-CYCLE MODE. From the color bar pattern (or Game-Over with the switch set to AUTO-UP) depress ADVANCE two times to display GAME ADJUSTMENTS.

1. Position the cursor on AUTO CYCLE with the PLAYER 1 joystick and push the PLAYER 2 joystick right.
2. Depress ADVANCE.
3. The system will now sequence through ROM, RAM, and CMOS RAM tests repeatedly. The coin door or hood must be open during the Auto-Cycle test. If an error is detected, the test is terminated and the failure indication is displayed on the CRT.
4. To terminate the Auto-Cycle test, turn the game OFF and ON.

TROUBLESHOOTING PROCEDURES: DIAGNOSTIC MODE TESTS

TEST	ROM BOARD LEDS RECOGNIZE CONDITION	ROM BOARD LEDS IDENTIFY BAD CHIPS	VIDEO	REMEDY
ROM	"2" means ROM error	2-digit ROM chip no.	"ROM ERROR" and ROM chip no.	(1) Turn power off. (2) Replace suspected chip.
RAM	"1" means RAM error	Bank no. first... then chip no. in bank (see figure 4)	"RAM ERROR" followed by RAM bank no. and chip no. (Note: with multiple RAM failures this display may not appear)	*(1) Check for these normal voltages on indicated RAM chip: –5/pin 1, +12/pin 8, +5/pin 9. (2) Turn power off. (3) Replace suspected chip. (4) With multiple RAM failures always check power supply. See POWER-UP TESTS.
CMOS (see CMOS RAM Test Protocol)	"3" means CMOS RAM error	—	"CMOS RAM ERROR OR WRITE PROTECT FAILURE"	(1) With power off, check pin 18 of CMOS RAM for 3.2VDC minimum. If present, replace CMOS chip U38. If absent, replace AA alkaline cells. (2) With new alkaline cells and power off, check for 3.2V minimum at pin 18. If still absent, replace diodes D1 and D2. (3) Upon power-up and reentry into diagnostics if CMOS error message persists, check CMOS RAM memory protect and address decoding circuits with a logic probe.

Tests 4 and 7 provide sequential subtests. To stop automatic cycling set switch to MANUAL-DOWN. Depress ADVANCE in MANUAL-DOWN to step through subtests. LED indications are not made for these tests.

<table>
<tr><th>TEST & PROCEDURES</th><th>VIDEO</th><th>REMEDY OR ADJUSTMENT</th></tr>
<tr><td>SOUND
(Test 4)</td><td>"RIGHT SOUND LINE 1" "LEFT SOUND LINE 1"
"RIGHT SOUND LINE 2" "LEFT SOUND LINE 2"
"RIGHT SOUND LINE 3" "LEFT SOUND LINE 3"
"RIGHT SOUND LINE 4" "LEFT SOUND LINE 4"
"RIGHT SOUND LINE 5" "LEFT SOUND LINE 5"
"RIGHT SOUND LINE 6" "LEFT SOUND LINE 6"
(These appear one at a time.)</td><td>MISSING CHECK
1 2P3/10P3/13P3 pin 3
2 2P3/10P3/13P3 pin 2
3 2P3/10P3/13P3 pin 5
4 2P3/10P3/13P3 pin 4
5 2P3/10P3/13P3 pin 8
6 2P3/10P3/13P3 pin 6
All Right 2P3/10P3 pin 7
All Left 2P3/13P3 pin 8
NOTE: If any two sounds are the same, check for a short between the select lines with the same sound.</td></tr>
<tr><td>SWITCH
(Test 5)

(1) Set switch to MANUAL-DOWN and clear any stuck switches.
(2) CRT should indicate no switches closed.
(3) Operate switches and check for display of switch name.</td><td>CRT indicates AUTO-UP closed and any stuck switches. CRT Display for each Switch...

ROM BOARD SW.
ADVANCE
AUTO-UP
HIGH SCORE RESET
LEFT COIN (next to hinge)
CENTER COIN
RIGHT COIN
SLAM SWITCH

INTERFACE BOARD SW.
1-PLAYER START
2-PLAYER START
UP-DOWN A
UP-DOWN B
UP-DOWN C
UP-DOWN DIRECTION
RIGHT-LEFT A
RIGHT-LEFT B
RIGHT-LEFT C
RIGHT-LEFT DIRECTION
THRUST (JOYSTICK)
BLAST
THRUST (PANNEL)</td><td>(Refer to CABINET WIRING Diagram)
(1) ROM BOARD SWITCH STUCK: Disconnect 2P3.
(2) INTERFACE BOARD SWITCH STUCK: Disconnect 3P2 or 3P3.
(3) ROM BOARD SWITCH DOES NOT OPERATE: Ground corresponding pin of 2P3.
(4) INTERFACE BOARD SWITCH DOES NOT OPERATE: Ground corresponding pin of 3P2 or 3P3.
☐ SYMPTOM REMAINS SAME ... ROM Board or Interface Board Faulty.
☐ SYMPTOM CLEARS UP ... Problem is in switches or wiring.
ADDITIONAL TESTS FOR OPTOSWITCHES:
(5) Check that +5VDC is at pin 1 or 12P1.
(6) With joystick in center position, check for 0.7V at base of ON transistor(s) (Q1 thru Q6) and 0.1V at pin(s) 2, 3, 4, 6, 7 and 8 of 12P1.
(7) With joystick moved from center position, check for 0.1V at base of OFF transistor(s), and +5V at corresponding pins 2, 3, 4, 6, 7 and 8 of 12P1.
(8) With joystick in center position, check for +5V at pins 5 and 9 of 12P1. With joystick in Down (Left) position, check for +5V at pin 5 (9) of 12P1. With joystick in Up (Right) position, check for 0V at pin 5 (9) of 12P1.</td></tr>
</table>

MORE DIAGNOSTIC MODE TESTS

TEST & PROCEDURES	VIDEO SEQUENCES	REMEDY OR ADJUSTMENT	
		REPLACE RAM U91	REPLACE RAM U90
COLOR RAM (Test 6) **Note that a blank sequence** or two sequences with the same shade indicate a faulty U92 latch, U90 RAM or U91 RAM or a failure in the color analog circuit. Check voltages on Q10 (red transistor), Q11 (green transistor) and Q12 (blue transistor). During the eight full-screen color tests, the base voltage (center pin) on each transistor should vary between 3.8V (brightest color) and 4.4V (no color).	1) light red screen 2) red screen 3) dark red screen	too-light or too-dark red or gray band	magenta band
	4) light green screen 5) green screen 6) dark green screen	yellow band	cyan band
Color RAM Check (1) CRT sequences through 8 colors, 2 seconds each. (2) Thick vertical band indicates color RAM fault. 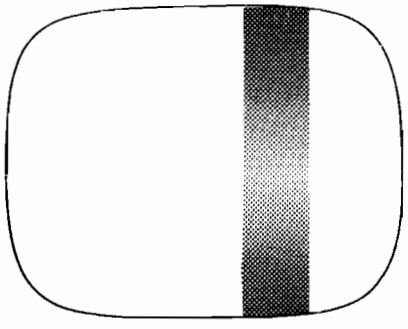	7) light blue screen 8) blue screen	magenta band	too-light or too -dark blue or gray band
	4) light green screen	green band	dark green band or gray band
	5) green screen	light green band	dark green band or gray band
	6) dark green screen	—	gray band
MONITOR & COLOR RAM (Test 7)	**cross hatch pattern**	**Aids you in setting up** vertical and horizontal linearity, convergence, and focus.	
	red screen **green screen** **blue screen** **color pattern**	**Aid you** in optimizing color purity and color balance.	
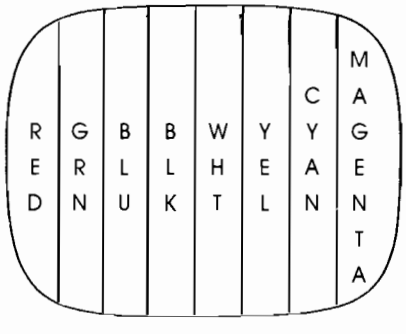 ***Color Bar Pattern***	**color bars** • double-width • half-width • transposed • missing	**If color RAM test 6 indicates** no faults, symptoms at left suggest a fault in U77, U90, U91 or U92 chips.	

SOUND BOARD DIAGNOSTICS			
SYMPTOM	**TEST & PROCEDURES**		
MISSING SOUNDS; NO SOUND—STEP 1 *(ASSUMPTION: INPUT SECTION FAILURE)*	☐ **CHECK SOUND-SELECT INPUTS**		
	TEST	**TOOL**	**CONDITION & REMEDY**
	Sound Board connector 10P3/13P3 pins 2 to 8	logic probe (game on and in Test 4)	.PULSING–proceed •LOW–check jacks, foils •STILL LOW–perform ROM BOARD checkbox.
	SR1 DIP resistors R3-R9	VOM-reading ohms (game off)	.ALL 4.7K-proceed •ANY OPEN–replace SR1
	C3-C9	VOM-reading ohms (game off)	.ALL OKAY–proceed •ANY SHORTED–replace bad
	IC5-1, IC7-14 (power pins)	logic probe (game on and in Test 4)	.HIGH–proceed •LOW–replace C19 (IC5) or C21 (IC7) •STILL LOW–replace bad IC
	IC5-2, 4, 6, 10, 12, 15; IC7-4, 6	logic probe (game on and in Test 4)	.PULSING–proceed •LOW–replace chip
	IC10-18 and 19 (PIA)	logic probe (game on and in Test 4)	.PULSING–proceed •LOW–lift C20, retest •PULSING NOW–replace C20 •STILL LOW–replace IC6, retest
	IC10-10 to 17 (PIA)	logic probe (game on and in Test 4)	.PULSING–proceed •SOME LOW–replace IC •ALL LOW–lift C31, retest •PULSING NOW–replace C31 •STILL LOW–replace IC

NOTE: In games where no sounds are produced from either sound board, disconnect both 9-pin connectors from one board and then the other. This isolates certain faults to a single Sound Board. If sounds are still not produced from either board, check ROM Board outputs on page 21 first.

MORE SOUND BOARD DIAGNOSTICS

SYMPTOM	TEST & PROCEDURES
MISSING SOUNDS; NO SOUND—STEP 2 *(ASSUMPTION: OFF-BOARD FAILURE)*	☐ **CHECK ROM BOARD OUTPUTS** (1) If you hear game sounds, disconnect and then reconnect Sound Board connectors 10P3 and 13P3. (2) You should hear one or more game sounds. If so, put game in **Diagnostic Mode** Test 4 and proceed with this checkbox. If not, go ahead to POWER SUPPLY checkbox below.

TEST	TOOL	CONDITION & REMEDY
ROM Board connector 2P4/J4-2 to 7	logic probe (game on and in Test 4)	•PULSING–repair cable to Sound Board •ANY LOW–repair jack or foil, proceed
U30 DIP resistors 2 to 8	VOM-reading ohms (game off)	•ALL 4.7K–proceed •ANY OPEN–replace U30
C40-53	VOM-reading ohms (game off)	•ALL OKAY–proceed •ANY SHORTED–replace bad
U29-10 to 17 (PIA)	logic probe (game on and in Test 4)	•PULSING–proceed •SOME LOW–replace U29

NO SOUND *(ASSUMPTION: POWER SECTION FAILURE)*	☐ **CHECK ON-BOARD POWER SUPPLY** (1) With power off, test for fuse continuity at F1 and F2. (2) With power on, check for +12V unregulated DC at TP1 and at pin 5 of IC1. (3) Now check for +5V regulated DC between TP4 and TP3. If voltages are absent or low, turn off game and lift one pin of filter capacitors C25, C26 and C27. (4) Check each with ohmmeter for possible shorts. (5) If capacitors are good and unregulated voltages test okay but you're missing +5V, replace regulator chip (IC8).
STILL NO SOUND *(ASSUMPTION: AUDIO SECTION FAILURE)*	☐ **CHECK AUDIO (ANALOG) SECTION** (1) Turn power on; turn up volume control. Momentarily place powered-up AC soldering pencil on final amplifier's input pin (IC1, pin 1 or 10P4, pin 2). If you hear low hum, audio IC, volume pot and speaker are okay. (2) Repeat test at Q2 emitter. If you hear hum, analog section is okay. Step (1) will also work if you simply touch amplifier's input pin. *However output level of hum will be much lower than with soldering iron.* DO NOT use a soldering pencil of over 40 watts. Cordless models will NOT work here.
MISSING SOUNDS; NO SOUND *(ASSUMPTION: DIGITAL FAILURE)*	☐ **CHECK SOUND ROM (IC12) AND RELATED CIRCUITRY** (1) Turn power on. (2) If you have no game sounds but power supply tests show normal voltages and no ripple on +5V, check crystal clock circuit. Using DVM or logic probe, test for pulsing AC across crystal. If clock signal's absent, replace crystal and associated capacitors. (3) Turn power off. (4) Swap sound ROM (IC12) and then microprocessor chip (IC9) with known-good chips. (5) Power-up and test Sound Board after each swap by pushing DIAGNOSTIC button.

CMOS RAM Data Test Protocol

The first sub-test of the CMOS RAM data is that of the ATTRACT MODE MESSAGE checksum. If the test does not pass, the factory ATTRACT MODE MESSAGE is restored. Next, the game adjustments are checked and restored to factory settings if an error is found. If game adjustments are found intact, the high score table is checked for any bad entries. Bad entries are replaced with a score of 4,000 points and no initials. If all entries check, the game returns to the Game Over Mode.

If game adjustments are restored to factory settings, the AUDIT TOTALS are checked. If 5 or more audit digits are other than 0-9 (that is hexadecimal A through F) all audit totals are cleared. This is followed by a check of the high score table and the table is reset to factory settings if errors are found. Finally, game adjustments are rechecked and either OPEN COIN DOOR or FACTORY SETTINGS RESTORED is displayed. With the former, open the coin door and turn the game OFF and ON and then FACTORY SETTINGS RESTORED will be displayed. Return to game over by depressing the ADVANCE pushbutton or by turning the game OFF and ON a second time.

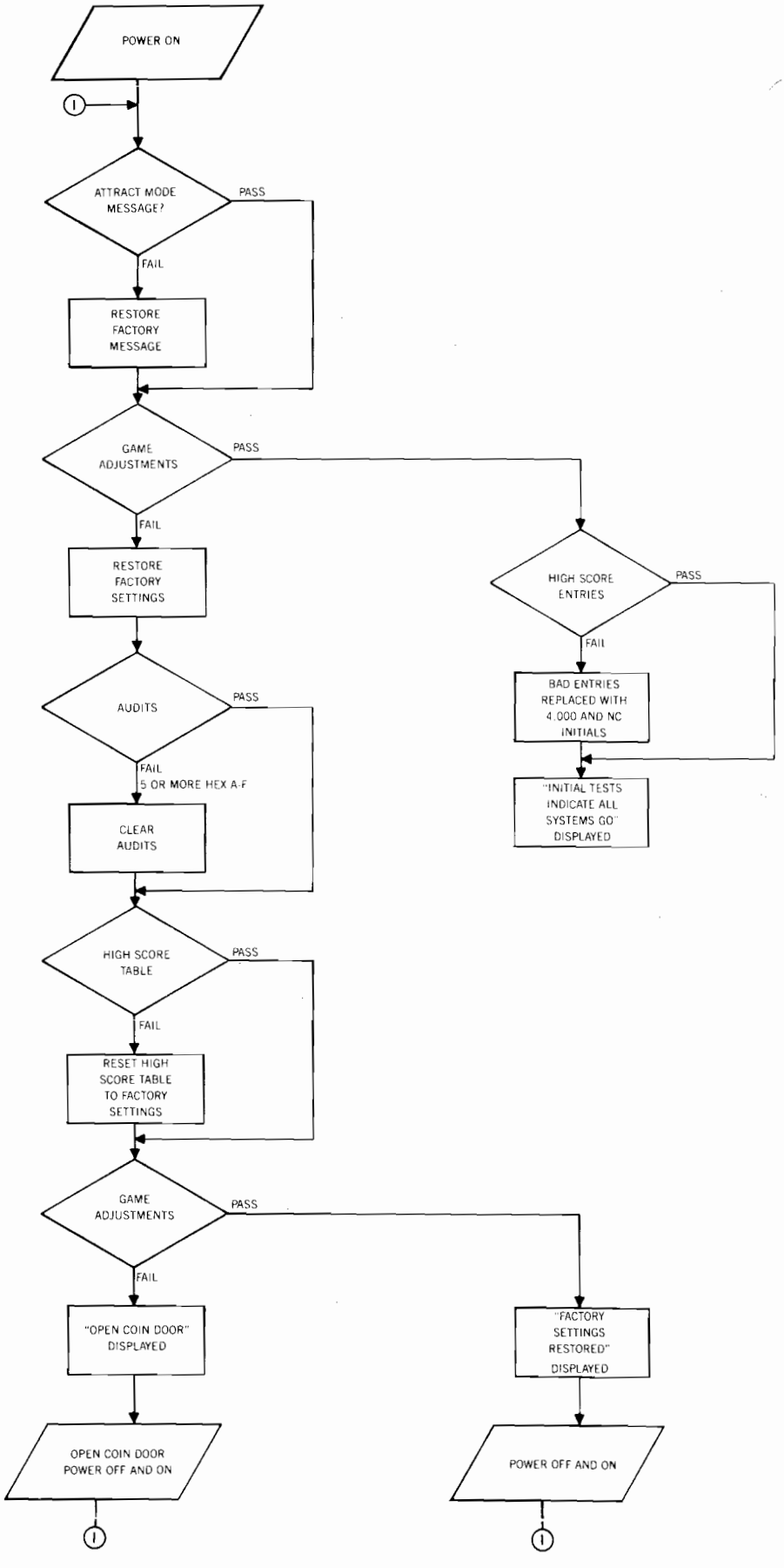

CHAPTER 4 Schematic and Logic Diagrams

Interboard Wiring (Sheet 1 of 2) 25
Interboard Wiring (Sheet 2 of 2) 26
CPU Board Bill of Materials 27
CPU Board Assembly Drawing 28
CPU Board Logic Diagram (Sheet 1 of 3) 29
CPU Boad Logic Diagram (Sheet 2 of 3) 30
CPU Board Logic Diagram (Sheet 3 of 3) 31
ROM Board Assembly Drawing 32
ROM Board Logic Diagram (Sheet 1 of 2) 33
ROM Board Logic Diagram (Sheet 2 of 2) 34
Interface Board Assembly and Logic Diagram 35
D-8784 Power Supply Assembly Drawing 36
D-8784 Power Supply Schematic Diagram 37
D-9444 Power Supply Assembly Drawing 38
D-9444 Power Supply Schematic Diagram 39
Power Wiring Diagram 40
Cabinet Wiring and Joystick Diagram 41
Sound Board Assembly Drawing 42
Sound Board Logic Diagram 43

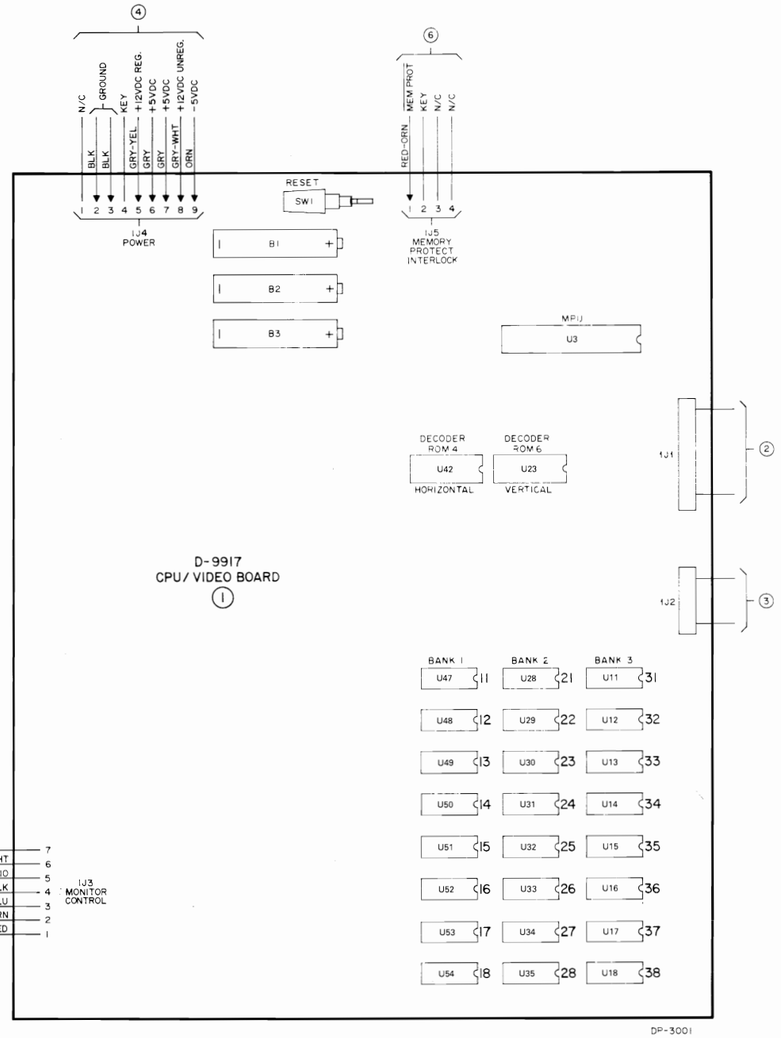
D-9917
CPU/VIDEO BOARD
1
4
N/C
GROUND
KEY
+12VDC REG.
+5VDC
+5VDC
+12VDC UNREG.
-5VDC
BLK
BLK
GRY-YEL
GRY
GRY
GRY-WHT
ORN
1 2 3 4 5 6 7 8 9
1J4
POWER
6
RED-ORN
MEM PROT
KEY
N/C
N/C
1 2 3 4
1J5
MEMORY PROTECT INTERLOCK
RESET
SW1
B1
B2
B3
MPU
U3
DECODER ROM 4
U42
HORIZONTAL
DECODER ROM 6
U23
VERTICAL
1J1
2
1J2
3
BANK 1
BANK 2
BANK 3
U47 11
U48 12
U49 13
U50 14
U51 15
U52 16
U53 17
U54 18
U28 21
U29 22
U30 23
U31 24
U32 25
U33 26
U34 27
U35 28
U11 31
U12 32
U13 33
U14 34
U15 35
U16 36
U17 37
U18 38
N/C 7
HORIZ. SYNC VIO-WHT 6
VERT. SYNC VIO 5
GROUND BLK 4
BLUE VIO-BLU 3
GREEN VIO-GRN 2
RED VIO-RED 1
5
1J3
MONITOR CONTROL
DP-3001

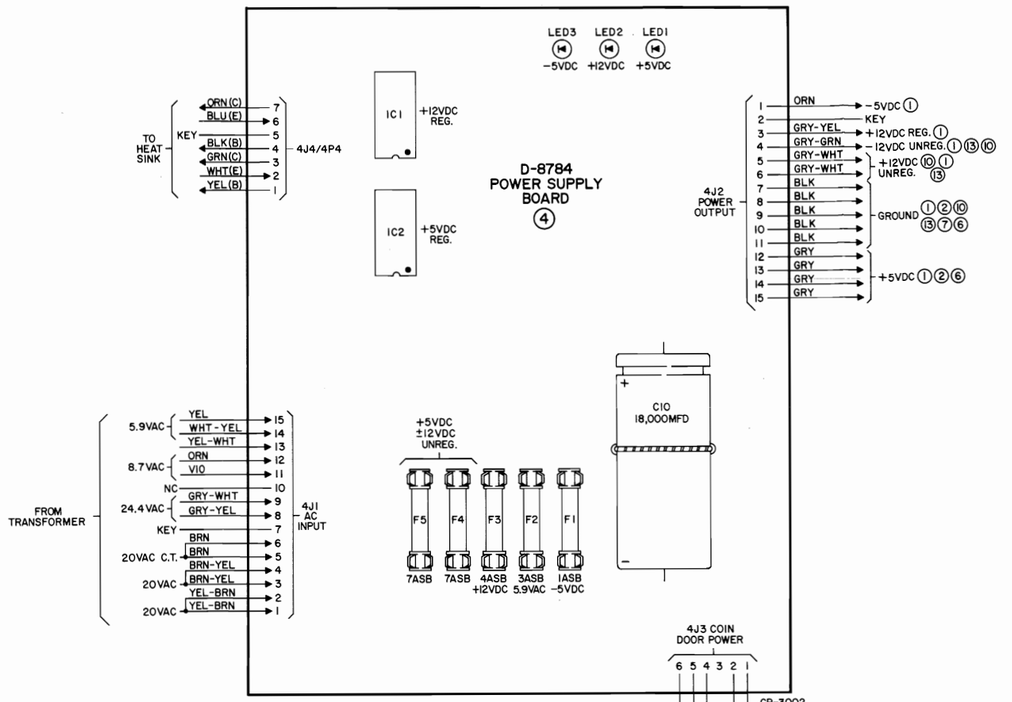
D-8784
POWER SUPPLY
BOARD
4
LED3 -5VDC
LED2 +12VDC
LED1 +5VDC
TO HEAT SINK
KEY
ORN(C) 7
BLU(E) 6
BLK(B) 5
GRN(C) 4
WHT(E) 3
YEL(B) 2
1
4J4/4P4
IC1
+12VDC REG.
IC2
+5VDC REG.
4J2 POWER OUTPUT
1 ORN -5VDC 1
2 KEY
3 GRY-YEL +12VDC REG. 1
4 GRY-GRN -12VDC UNREG. 1 13 10
5 GRY-WHT
6 GRY-WHT
+12VDC 10 1 13 UNREG.
7 BLK
8 BLK
9 BLK
10 BLK
11 BLK
GROUND 1 2 10 13 7 6
12 GRY
13 GRY
14 GRY
15 GRY
+5VDC 1 2 6
FROM TRANSFORMER
5.9VAC YEL 15
WHT-YEL 14
YEL-WHT 13
8.7VAC ORN 12
VIO 11
NC 10
24.4VAC GRY-WHT 9
GRY-YEL 8
KEY 7
BRN 6
20VAC C.T. BRN 5
BRN-YEL 4
20VAC BRN-YEL 3
YEL-BRN 2
20VAC YEL-BRN 1
4J1 AC INPUT
+5VDC +12VDC UNREG.
F5 7ASB
F4 7ASB
F3 4ASB +12VDC
F2 3ASB 5.9VAC
F1 1ASB -5VDC
C10 18,000MFD
4J3 COIN DOOR POWER
6 5 4 3 2 1
NC
KEY
NC
WHT-YEL
YEL
6 5.9VAC
CP-3002

D-9191
INTERFACE
BOARD
3
1
3J1
3J3
3J2
12 11 10 9 8 7 6 5 4 3 2 1
15 14 13 12 11 10 9 8 7 6 5 4 3 2 1
NC
2 PLAYER START YEL-BLU
1 PLAYER START YEL-GRN
THRUST (JOYSTICK) RED-YEL
TWIST (PANEL) RED-BRN
BLAST RED-BLK
RIGHT-LEFT DIRECT ORN-WHT
RIGHT-LEFT SWITCH C ORN-GRY
KEY
RIGHT-LEFT SWITCH B ORN-BLU
RIGHT-LEFT SWITCH A ORN-GRN
UP-DOWN DIRECTION ORN
UP-DOWN SWITCH C ORN-YEL
UP-DOWN SWITCH B ORN-RED
UP-DOWN SWITCH A ORN-BRN
CP-3003
* 2-PLAYER START NOT CONNECTED IN COCKPIT GAMES
PLAYER PANEL
7

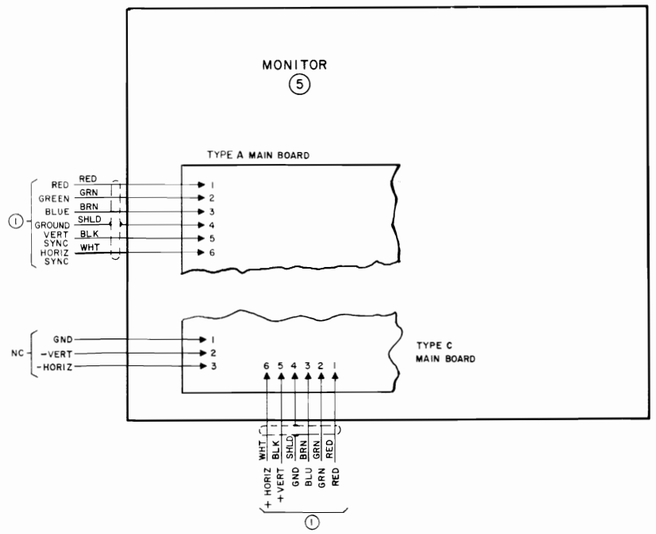
MONITOR
5
TYPE A MAIN BOARD
1
RED RED 1
GREEN GRN 2
BLUE BRN 3
GROUND SHLD 4
VERT SYNC BLK 5
HORIZ SYNC WHT 6
NC
GND
-VERT
-HORIZ
1
2
3
TYPE C MAIN BOARD
6 5 4 3 2 1
+HORIZ WHT
+VERT BLK
GND SHLD
BLU BRN
GRN GRN
RED RED
1

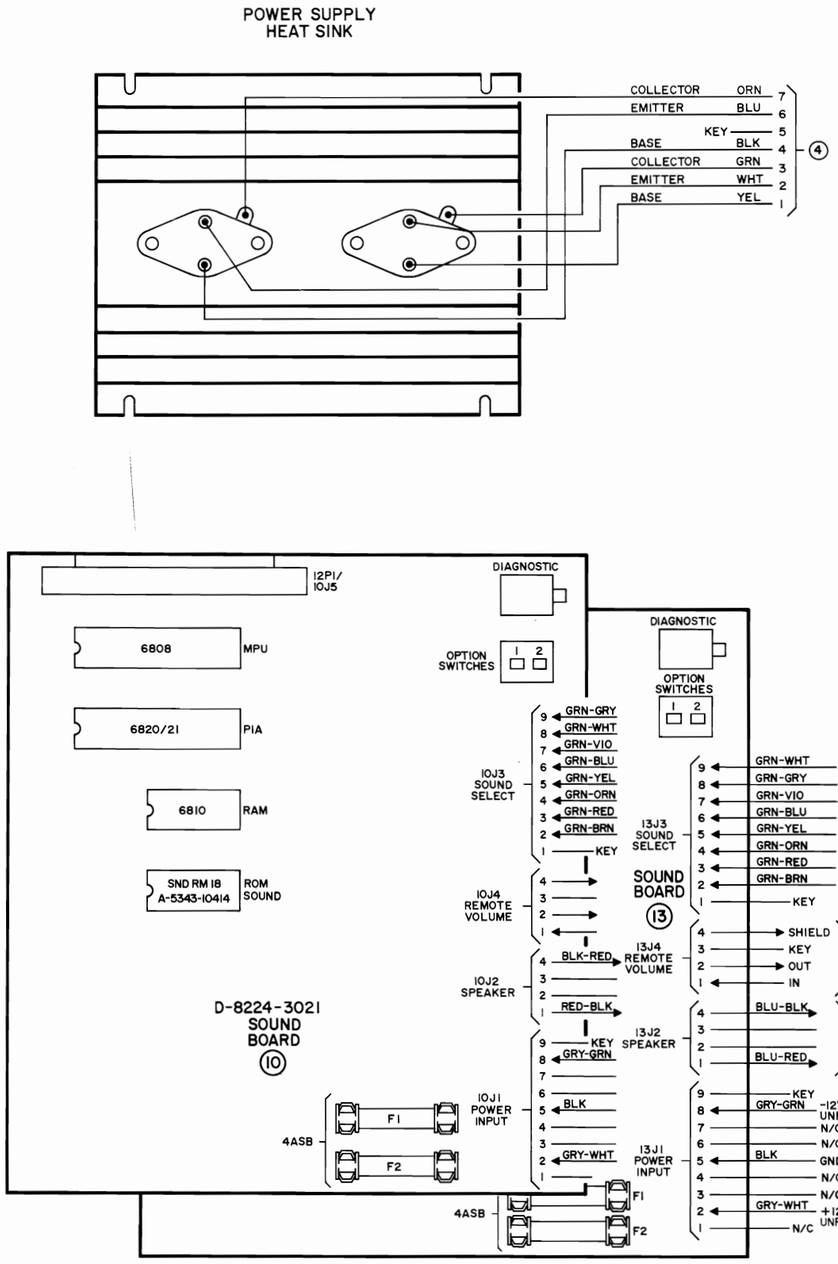
POWER SUPPLY
HEAT SINK
COLLECTOR ORN 7
EMITTER BLU 6
KEY 5
BASE BLK 4
COLLECTOR GRN 3
EMITTER WHT 2
BASE YEL 1
4
12P1/
10J5
DIAGNOSTIC
6808 MPU
OPTION
SWITCHES
1 2
6820/21 PIA
6810 RAM
SND RM 18
A-5343-10414
ROM
SOUND
10J3
SOUND
SELECT
GRN-GRY
GRN-WHT
GRN-VIO
GRN-BLU
GRN-YEL
GRN-ORN
GRN-RED
GRN-BRN
KEY
13J3
SOUND
SELECT
SOUND
BOARD
13
2
10J4
REMOTE
VOLUME
10J2
SPEAKER
BLK-RED
RED-BLK
13J4
REMOTE
VOLUME
13J2
SPEAKER
SHIELD
KEY
OUT
IN
7
BLU-BLK
BLU-RED
D-8224-3021
SOUND
BOARD
10
10J1
POWER
INPUT
BLK
GRY-WHT
13J1
POWER
INPUT
KEY
GRY-GRN
-12VDC
UNREG.
N/C
GND
+12VDC
UNREG.
4ASB
F1
F2
CP-3005

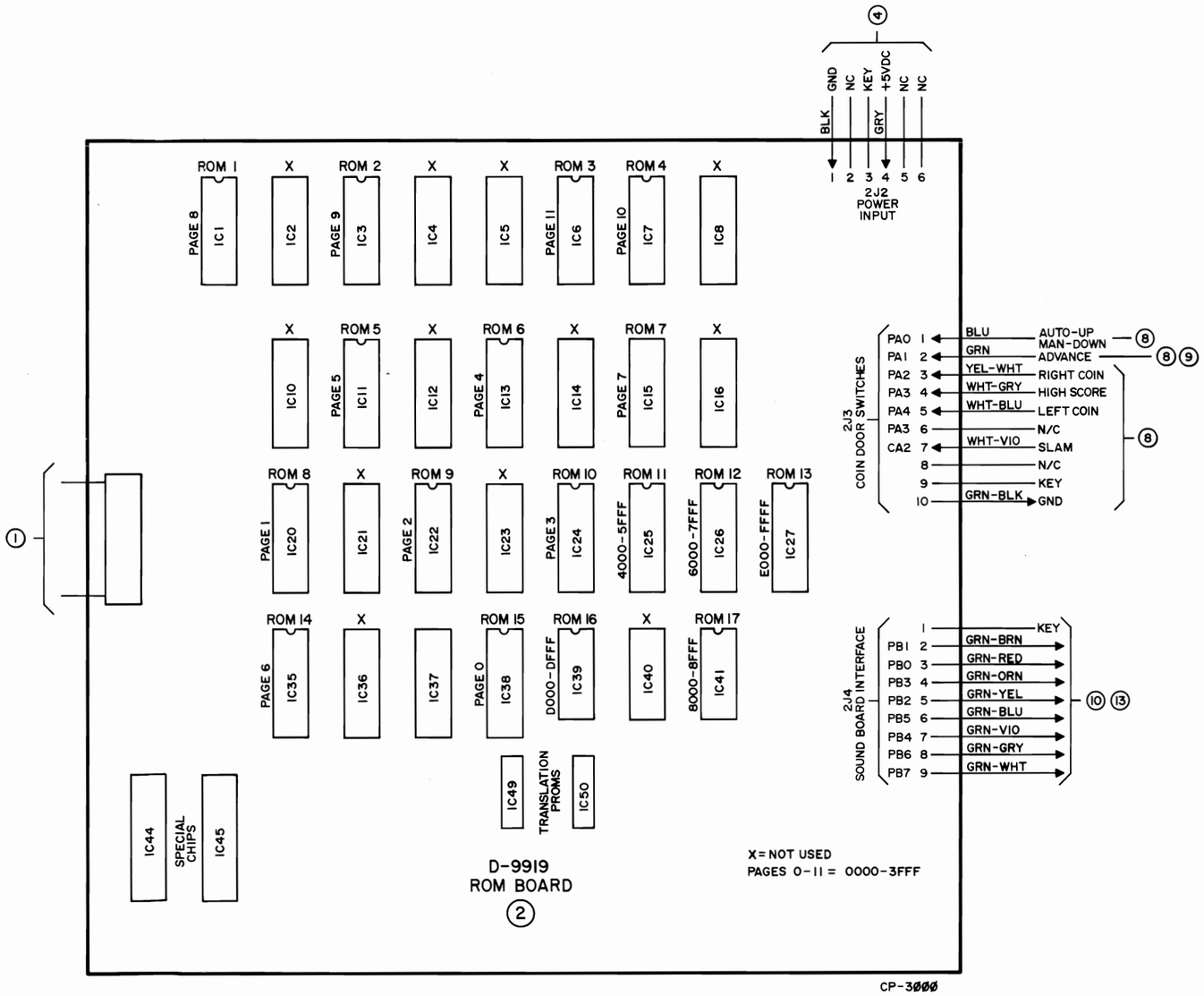
4
BLK GND
NC
KEY
GRY +5VDC
NC
NC
1 2 3 4 5 6
2J2
POWER
INPUT
ROM 1
ROM 2
ROM 3
ROM 4
PAGE 8
IC1
IC2
PAGE 9
IC3
IC4
IC5
PAGE 11
IC6
PAGE 10
IC7
IC8
ROM 5
ROM 6
ROM 7
PAGE 5
IC11
IC12
PAGE 4
IC13
IC14
PAGE 7
IC15
IC16
ROM 8
ROM 9
ROM 10
ROM 11
ROM 12
ROM 13
PAGE 1
IC20
IC21
PAGE 2
IC22
IC23
PAGE 3
IC24
4000-5FFF
IC25
6000-7FFF
IC26
E000-FFFF
IC27
ROM 14
ROM 15
ROM 16
ROM 17
PAGE 6
IC35
IC36
IC37
PAGE 0
IC38
D000-DFFF
IC39
IC40
8000-8FFF
IC41
IC49
IC50
TRANSLATION
PROMS
IC44
SPECIAL
CHIPS
IC45
1
D-9919
ROM BOARD
2
X=NOT USED
PAGES 0-11 = 0000-3FFF
2J3
COIN DOOR SWITCHES
PA0 1 BLU AUTO-UP MAN-DOWN 8
PA1 2 GRN ADVANCE 8 9
PA2 3 YEL-WHT RIGHT COIN
PA3 4 WHT-GRY HIGH SCORE
PA4 5 WHT-BLU LEFT COIN
PA3 6 N/C
CA2 7 WHT-VIO SLAM
8 N/C
9 KEY
10 GRN-BLK GND
8
2J4
SOUND BOARD INTERFACE
1 KEY
PB1 2 GRN-BRN
PB0 3 GRN-RED
PB3 4 GRN-ORN
PB2 5 GRN-YEL
PB5 6 GRN-BLU
PB4 7 GRN-VIO
PB6 8 GRN-GRY
PB7 9 GRN-WHT
10 13
CP-3000

NOTES:

1. FOR SCHEMATIC, REFER TO DWG. #16-8883.
2. I.C., 4116:
   U11, U12, U13, U14, U15, U16, U17, U18, U28, U29, U30, U31, U32, U33, U34, U35, U47, U48, U49, U50, U51, U52, U53, U54.
3. I.C., 74166:
   U8, U9, U25, U26, U44, U45, U63, U64.
4. RESISTOR, 1K OHM:
   R6, R20, R23, R26, R37, R45.
5. CAPACITOR, .001 MFD.:
   C131, C132, C133, C134, C136, C138, C139, C141.
6. CAPACITOR, .01 MFD.:
   C1, C2, C3, C4, C5, C6, C7, C8, C9, C10, C11, C12, C13, C14, C15, C16, C17, C18, C19, C20, C21, C22, C23, C24, C25, C26, C27, C28, C29, C30, C31, C32, C33, C34, C35, C36, C37, C38, C39, C40, C41, C42, C43, C44, C45, C46, C47, C48, C49, C50, C51, C52, C53, C54, C55, C56, C57, C58, C59, C60, C61, C62, C63, C64, C65, C66, C67, C68, C69, C70, C71, C72, C73, C74, C75, C76, C77, C78, C79, C80, C81, C82, C83, C84, C85, C86, C87, C88, C89, C90, C91, C92, C93, C94, C95, C96, C97, C98, C99, C100, C101, C103, C104, C105, C106, C107, C108, C109, C110, C112, C113, C114, C115, C116, C117, C118, C119, C120, C121, C122, C123, C124, C125, C126, C127, C143.
7. DIODE, 1N4148:
   D3, D4, D5, D6, D7, D8, D9, D10.
8. TRANSISTORS, 2N3904
   Q1, Q2, Q3, Q4, Q6, Q7, Q8, Q9.
9. JUMPERS
   W2, W3, W4, W5, W6, W7, W8; W1 NOT USED.

ITEM	PART NO.	PART DESIGNATION	DESCRIPTION	QTY.
89				
88	16-8850-83		LABEL - PCB ASSY. ID	1
87	5791-10444-00	1J1	40 PIN RIGHT ANGLE HEADER	1
86	5791-09437-00	1J2	20 PIN RIBBON CABLE HEADER	1
85	5791-09027-00	1J4	9 PIN HEADER, 09-65-1091	1
84	5791-09497-00	1J5	7 PIN HEADER, 09-65-1071	1
83	5791-09028-00	1J3	4 PIN HEADER, 09-65-1041	1
82	5700-08985-00		40 PIN I.C. SOCKET	1
81	5700-09004-00		24 PIN I.C. SOCKET	2
80	5700-09006-00		16 PIN I.C. SOCKET	24
79	5881-09021-00		BATTERY HOLDER #171	1
78	5880-09022-00	B1, B2, B3	BATTERY, ALKALINE, 1.5V (AA)	3
77	5641-09371-00	SW1	PUSH BUTTON SWITCH, SPST	0
	5641-09312-00		PUSH BUTTON SWITCH, DPDT MOMENTARY	1
76	5521-10028-00	CR1	OSCILLATOR, 12 MHZ	1
75	5551-09822-00	L2	INDUCTOR, 4.7 UH. 3A.	1
74	5551-10161-00	L1, L3, L4	INDUCTOR, 2.0 UH. 3A.	3
73	5019-09362-00	SR1, SR2, SR3, SR5	RESISTOR, 4.7K OHM 5% 10 PIN SIP	4
72	5019-09669-00	SR4	RESISTOR, 1K OHM 5% 10 PIN SIP	1
71	5190-10270-00	Q5, Q10, Q11, Q12, Q13	TRANSISTOR, TO-92, 2N3906	5
70	5160-10269-00	SEE NOTE #8	TRANSISTOR, TO-92, 2N3904	8
69	5075-09018-00	ZR2	ZENER DIODE, 1N5996A 6.8 V	1
68	5075-09059-00	ZR1	ZENER DIODE, 1N5990A 3.9 V	1
67	5070-09266-00	D2	DIODE, SILICON, 1N5817 1.0A	1
66	5070-08919-00	SEE NOTE #7	DIODE, SILICON, 1N4148 150 MA.	8
65	5070-06258-00	D1	DIODE, 1N4001 1.0A	1
64	5040-09421-00	C130, C135, C137, C140	CAPACITOR, ELECT. RAD. 100 MFD. 25V +50-10%	4
63	5040-09545-00	C142	CAPACITOR, ELECT, AXL. 22 MFD. 10V +/-20%	1
62	5043-08980-00	SEE NOTE #6	CAPACITOR, AXIAL .01 MFD. 50V +80-20%	126
61	5043-09845-00	SEE NOTE #5	CAPACITOR, AXIAL .001 MFD. 50V +/-10%	8
60	5043-09065-00	C102, C111, C128, C129	CAPACITOR, AXIAL 470 PFD. 50V +/-20%	4
59	5010-09035-00	R49	RESISTOR, C.F., 47K OHM 5% 1/4 WATT	1
58	5010-09113-00	R47	RESISTOR, C.F., 33K OHM 5% 1/4 WATT	1
57	5010-08774-00	R39, R40, R41, R42	RESISTOR, C.F., 22K OHM 5% 1/4 WATT	4
56	5010-09034-00	R4, R38, R46	RESISTOR, C.F., 10K OHM 5% 1/4 WATT	3
55	5010-08991-00	R5, R8, R9, R10, R36	RESISTOR, C.F., 4.7K OHM 5% 1/4 WATT	5
54	5010-08983-00	R1, R2, R3, R7, R44	RESISTOR, C.F., 3.3K OHM 5% 1/4 WATT	5
53	5010-08997-00	R43, R50	RESISTOR, C.F., 2.7K OHM 5% 1/4 WATT	2
52	5010-08998-00	R52	RESISTOR, C.F., 2.2K OHM 5% 1/4 WATT	1
51	5010-09314-00	R12, R14	RESISTOR, C.F., 1.2K OHM 5% 1/4 WATT	2
50	5010-09358-00	SEE NOTE #4	RESISTOR, C.F., 1K OHM 5% 1/4 WATT	6
49	5010-08992-00	R11, R15, R17	RESISTOR, C.F., 560 OHM 5% 1/4 WATT	3
48	5010-09416-00	R34	RESISTOR, C.F., 470 OHM 5% 1/4 WATT	1
47	5010-09001-00	R13, R16 R18, R35	RESISTOR, C.F., 330 OHM 5% 1/4 WATT	4
46	5010-09508-00	R28, R29, R30	RESISTOR, C.F., 270 OHM 2% 1/4 WATT	3
45	5010-09187-00	R19, R21, R22, R24, R25, R27	RESISTOR, C.F., 150 OHM 5% 1/4 WATT	6
44	5010-09036-00	R51	RESISTOR, C.F., 100 OHM 5% 1/4 WATT	1
43	5010-09548-00	R31, R32, R33	RESISTOR, C.F., 68 OHM 2% 1/4 WATT	3
42	5010-09039-00	R48	RESISTOR, C.F., 10 OHM 5% 1/4 WATT	1
41	5010-09534-00	SEE NOTE 9	RESISTOR, C.F., 0 OHM 1/4 WATT	7
40	5280-09489-00	U5, U22 U41, U60	I.C., 9316, 4-BIT BINARY COUNTER	4
39	A-5342-[illegible]	U23	I.C., 7641, UNIVERSAL VERT. DECODER ROM [illegible]	1
38	A-5342-09694	U42	I.C., 7641, UNIVERSAL HORZ. DECODER ROM 4	1
37	5281-09533-00	U36	I.C., 74LS393, DUAL 4-BIT BINARY COUNTER	1
36	5281-09486-00	U78, U92	I.C., 74LS374, OCTAL D-TYPE FLIP-FLOP	2
35	5281-09856-00	U10 U27, U65	I.C., 74LS373, OCTAL LATCH	3
34	5370-08989-00	U2, U4, U6, U20	I.C., 8T97, HEX. TS BUFFER	0
	5281-09385-00		I.C., 74LS367, HEX. BUS DRIVER	4
33	5281-09485-00	U46, U77	I.C., 74LS257, QUAD DATA MLTPX.	2
32	5281-09308-00	U21	I.C., 74LS245, OCTAL BUS TRANCEIVER	1
31	5281-09738-00	U66, U67, U79, U80	I.C., 74LS157, QUAD 2 TO 1 LINE DATA MLTPX	4
30	5281-09246-00	U55, U81	I.C., 74LS139, DUAL 2 TO 4 LINE DECODER	2
29	5281-09532-00	U1	I.C., 74LS133, 13-INPUT NAND	1
28	5281-09480-00	U94	I.C., 74LS107, DUAL J-K TYPE FLIP-FLOP	1
27	5281-09487-00	U73, U75 U85, U88	I.C., 74LS74, DUAL D-TYPE FLIP-FLOP	4
26	5280-09551-00	U76	I.C., 74S DUAL 4-INPUT NOR/STROBE	1
25				
24				
23	5282-10388-00	U69, U71	I.C., 74S08 QUAD 2-INPUT AND	2
22	5281-09215-00	U93	I.C., 74LS04, HEX. INVERTER	1
21				
20				
19	5280-09668-00	SEE NOTE #3	I.C., 74166, 8- BIT SHIFT REGISTER	8
18	5280-09481-00	U7, U24, U43, U62	I.C., 74153, DUAL 4 TO 1 DATA INVERTER	4
17	5282-10190-00	U61	I.C., 74S74, DUAL D-TYPE FLIP-FLOP	1
16	5281-09715-00	U90 U91	I.C., 74LS289, 16 X 4 RAM	0
	5281-09483-00		I.C., 74LS189, 16 X 4 RAM	0
	5282-09717-00		I.C., 74S289, 16 X 4 RAM	0
	5282-09716-00		I.C., 74S189, 16 X 4 RAM	0
	5280-09625-00		I.C., 7489, 16 X 4 RAM	2
15	5280-09479-00	U89, U101	I.C., 7486, QUAD 2-INPUT EX-OR	2
14	5280-09478-00	U58, U96, U97, U98	I.C., 7474, DUAL D-TYPE FLIP-FLOP	4
13	5280-09477-00	U57, U82	I.C., 7432, QUAD 2-INPUT OR	2
12	5280-09476-00	U40, U74	I.C., 7421, DUAL 4-INPUT AND	2
11	5280-09530-00	U99	I.C., 7420, DUAL 4-INPUT NAND	1
10	5280-09475-00	U39, U95	I.C., 7411, TRIPLE 3-INPUT AND	2
9	5280-09011-00	U56, U68 U70, U87	I.C., 7410, TRIPLE 3-INPUT NAND	4
8	5280-08973-00	U37	I.C., 7408, QUAD 2-INPUT AND	1
7	5280-09013-00	U59, U83	I.C., 7404, HEX. INVERTER	2
6	5280-08948-00	U19, U72 U84	I.C., 7402, QUAD 2-INPUT NOR	2
5	5280-09073-00	U86, U100	I.C. 7400, QUAD 2-INPUT NAND	3
4	5400-09490-00	U3	I.C., 6809E, MICROPROCESSOR	1
3	5340-09667-00	U38	I.C., 6514, 1K X 4 CMOS STATIC RAM	0
	5340-09689-00		I.C., 5114, 1K X 4 CMOS STATIC RAM	1
2	5340-10327-00	SEE NOTE #2	I.C., 4116, 16K X 1, 200NS	24
1	5770-10329-00		BARE P.C. BOARD, CPU	1

BILL OF MATERIALS

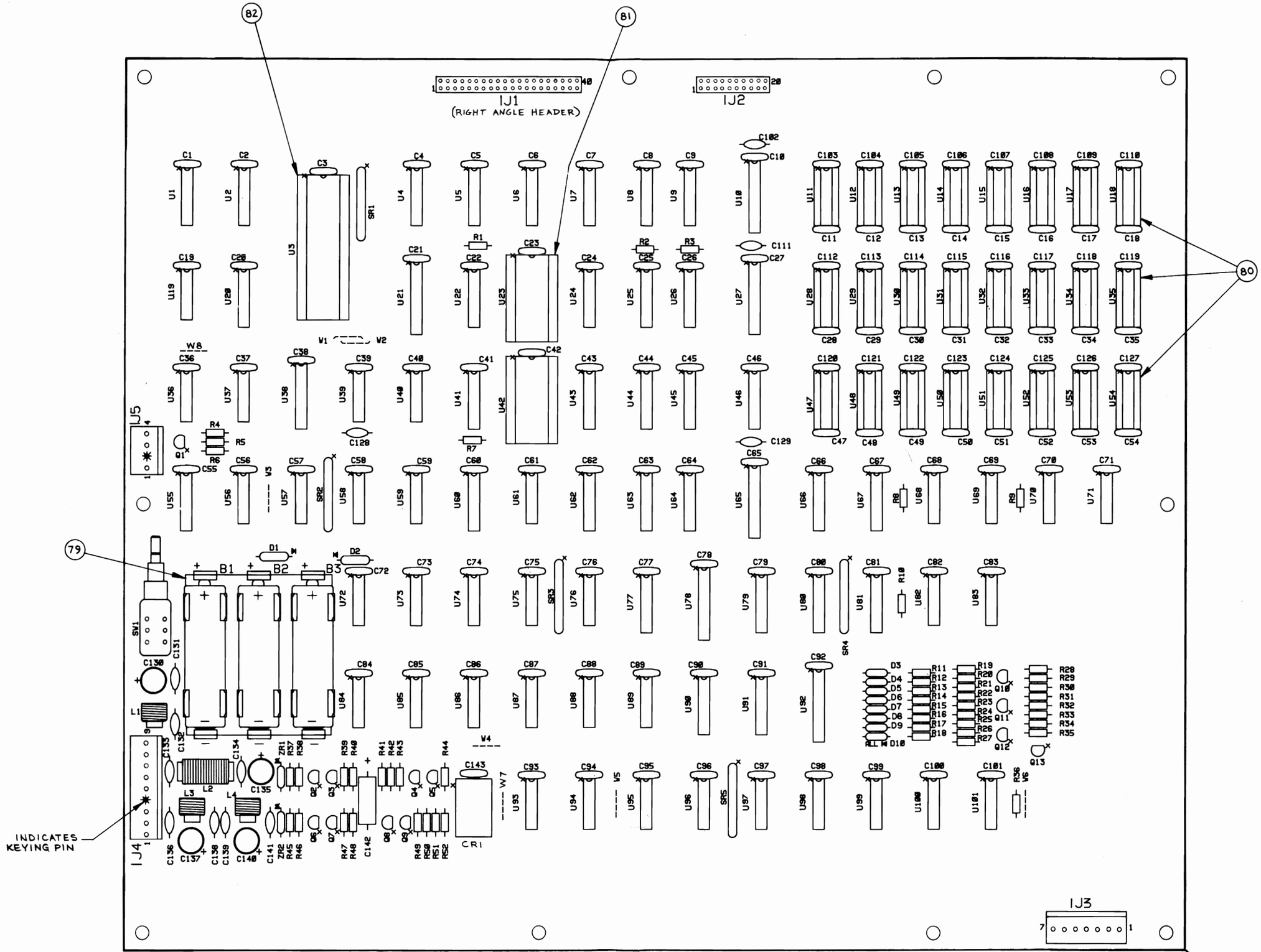

CPU Board Assembly Drawing

REV	DESCRIPTION OF CHANGE	ECN NO. DATE
	NPR	11483 9-9-83

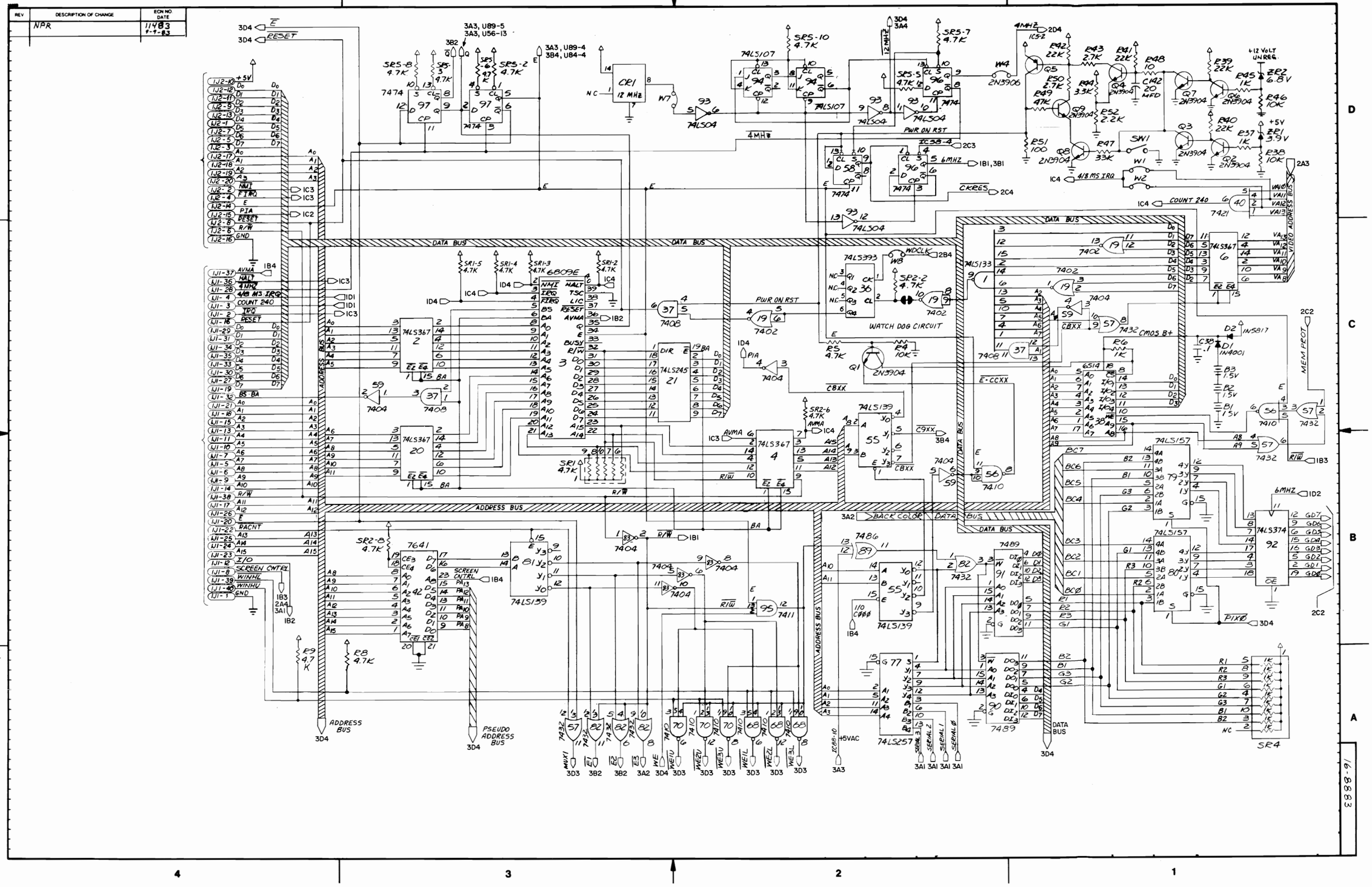

CPU Board Logic Diagram
(Sheet 1 of 3)

REV	DESCRIPTION OF CHANGE	ECN NO DATE
	NPR	11483 9-9-83

MONITOR INTERFACE SECTION

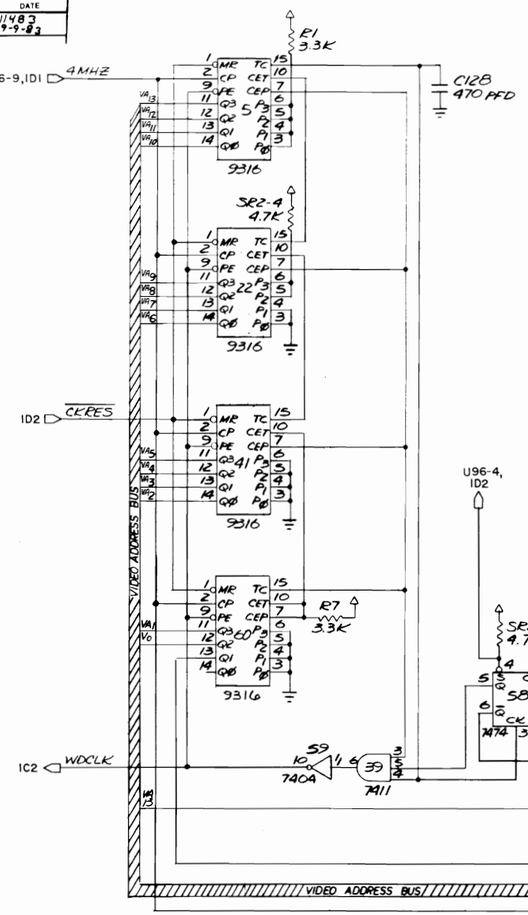

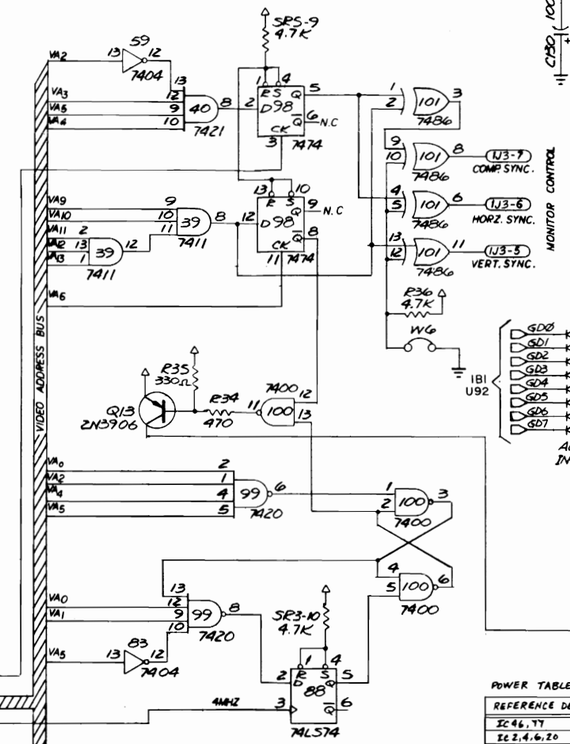

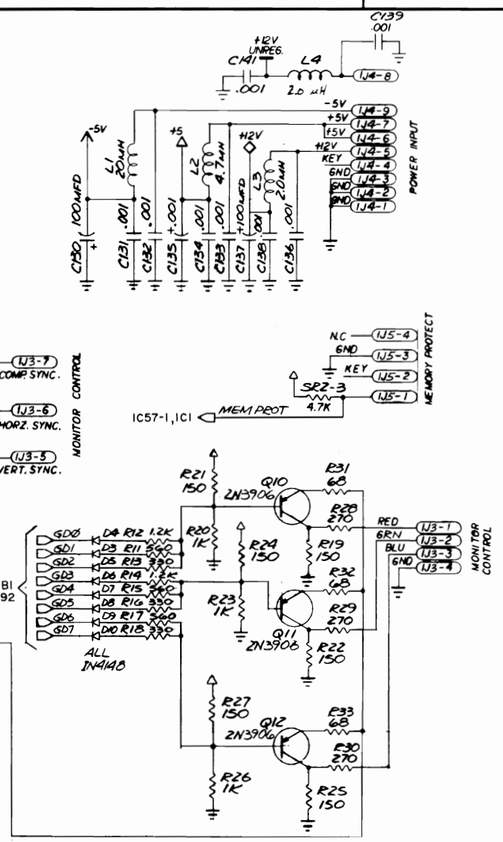

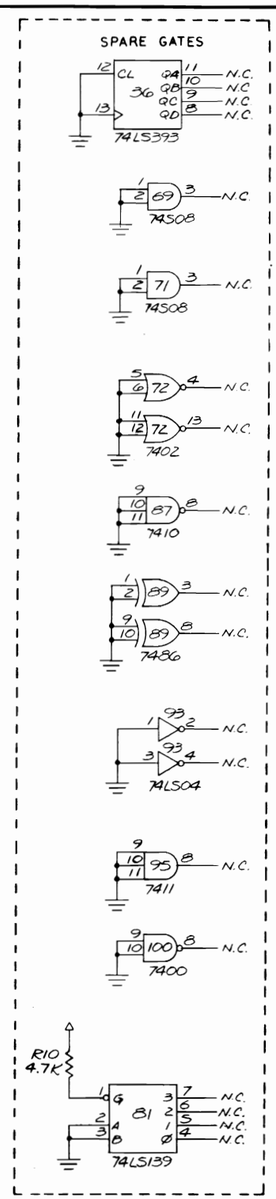

POWER TABLE

REFERENCE DESIG.	DESCRIPTION	+5V	GND
IC 84, 86, 100	7400	14	7
IC 19, 72	7402	14	7
IC 59, 83	7404	14	7
IC 93	74LS04	14	7
IC 37	7408	14	7
IC 69, 71	74S08	14	7
IC 56, 68, 70, 87	7410	14	7
IC 39, 35	7411	14	7
IC 99	7420	14	7
IC 40, 74	7421	14	7
IC 76	7425	14	7
IC 57, 82	7432	14	7
IC 58, 96, 97, 98	7474	14	7
IC 73, 75, 85, 88	74LS74	14	7
IC 61	74S74	14	7
IC 89, 101	7486	14	7
IC 90, 91	7489	16	8
IC 94	74LS107	14	7
IC 1	74LS133	16	8
IC 55, 81	74LS139	16	8
IC 7, 24, 43, 62	74153	16	8
IC 66, 67, 79, 80	74LS157	16	8
IC 89, 25, 26, 44, 45, 63, 64	74166	16	8
IC 21	74LS245	20	10

POWER TABLE

REFERENCE DESIG.	DESCRIPTION	+5V	GND	-5V	+12V
IC 46, 77	74LS257	16	8		
IC 2, 4, 6, 20	74LS367	16	8		
IC 10, 27, 65	74LS373	20	10		
IC 78, 92	74LS374	20	10		
IC 36	74LS393	14	7		
IC 5, 22, 41, 60	9316	16	8		
IC 83	ROM 6	24	12		
IC 42	ROM 4	24	12		
IC 11-18, 28-35, 49-54	4116	9	16	1	8
IC 3	6809E	7	1		
IC 38	5514		9		

16-8883

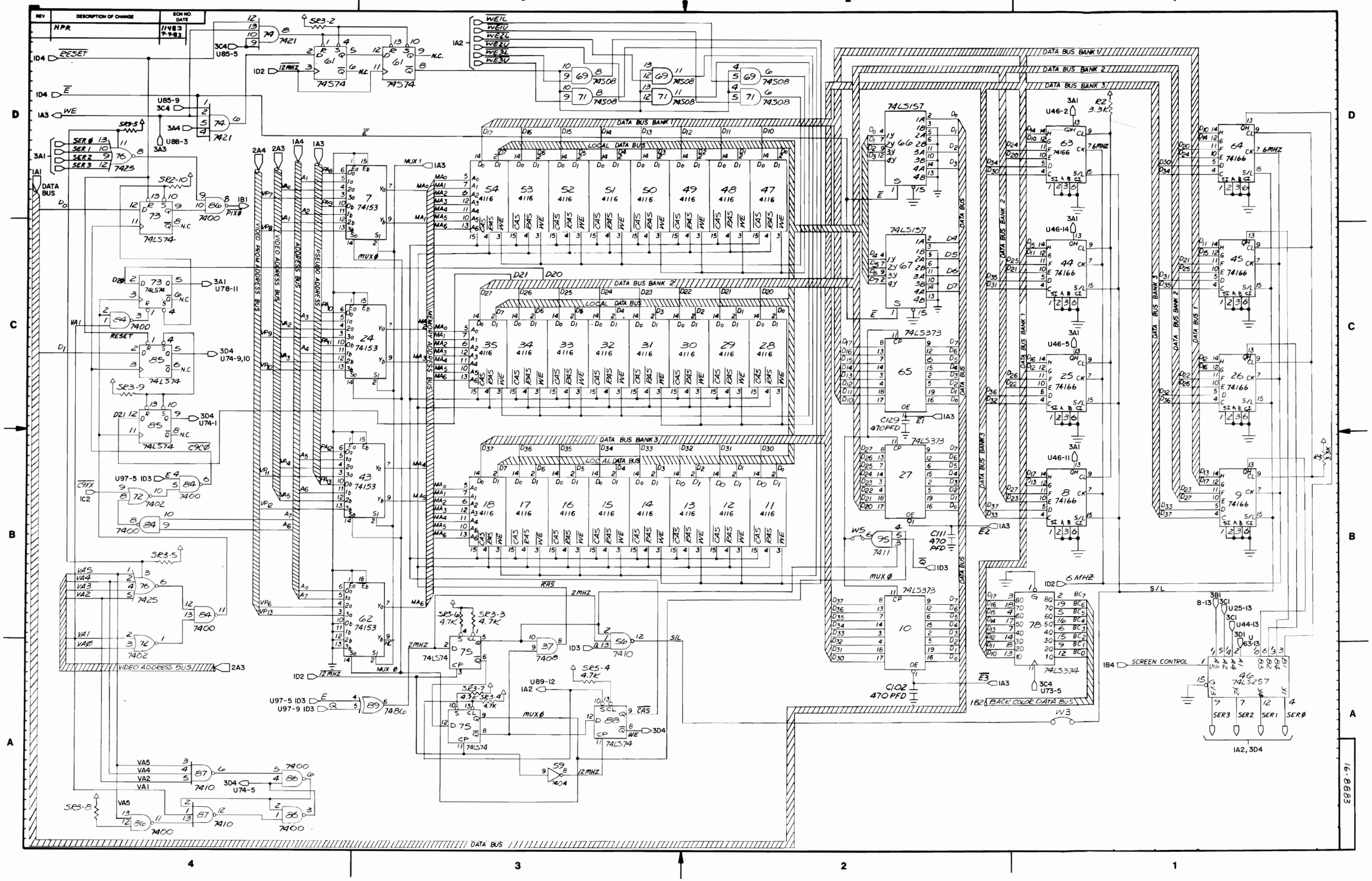

CPU Board Logic Diagram
(Sheet 3 pf 3)

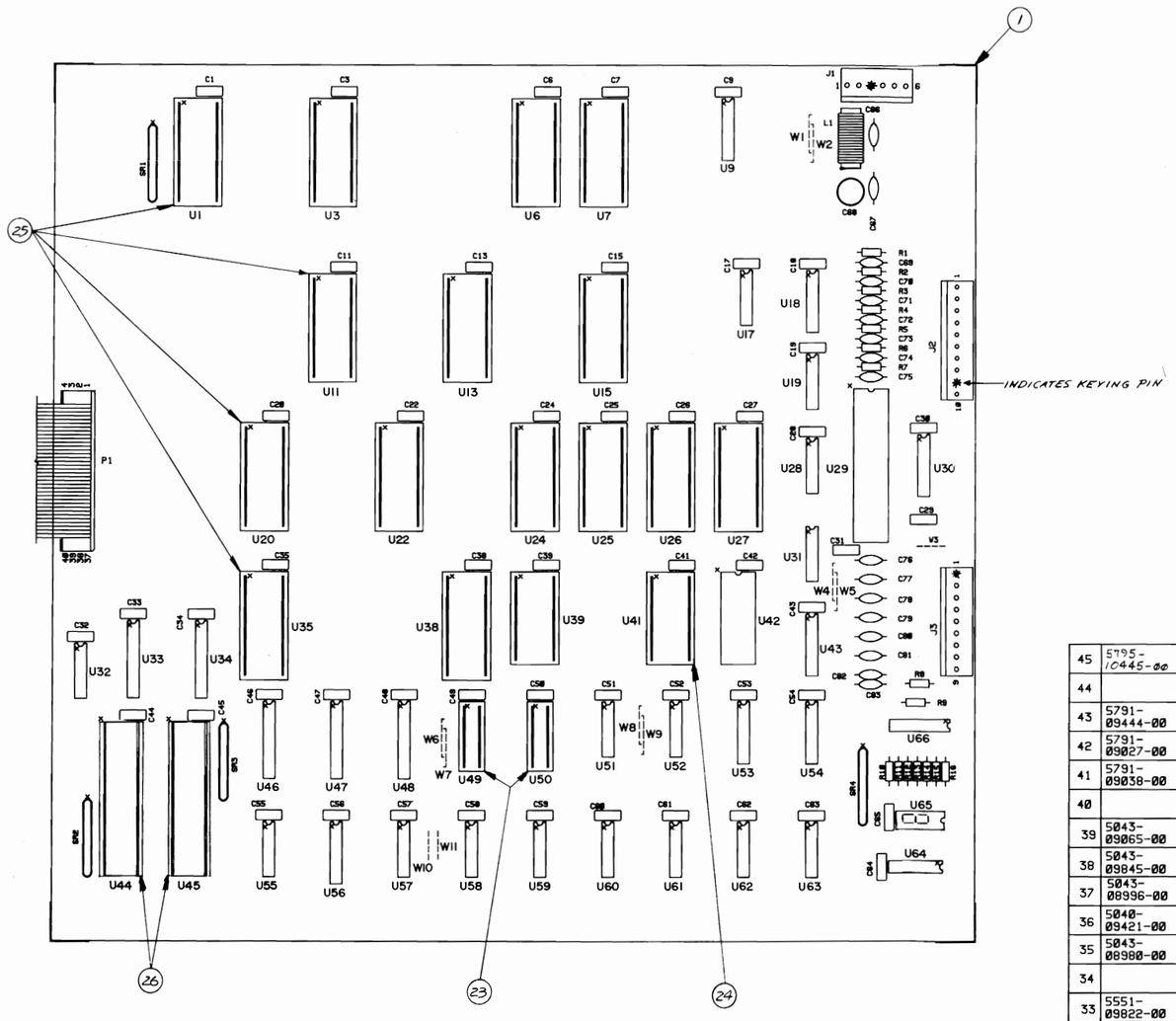

NOTE:
1. C2, C4, C5, C8, C10, C12, C14, C16, C21, C23, C36, C37, C40 NOT USED.

GAME NAME	BLASTER
ASSY. NO.	D-9919
U1	A-5343-10397
U2	NOT USED
U3	A-5343-10398
U4	NOT USED
U5	NOT USED
U6	A-5343-10399
U7	A-5343-10400
U8	NOT USED
U10	NOT USED
U11	A-5343-10401
U12	NOT USED
U13	A-5343-10402
U14	NOT USED
U15	A-5343-10403
U16	NOT USED
U20	A-5343-10404
U21	NOT USED
U22	A-5343-10405
U23	NOT USED
U24	A-5343-10406
U25	A-5343-10407
U26	A-5343-10408
U27	A-5343-10409
U35	A-5343-10410
U36	NOT USED
U37	NOT USED
U38	A-5343-10411
U39	A-5343-10412
U40	NOT USED
U41	A-5343-10413
U49	A-5282-10426
U50	A-5282-10426
JUMPERS	W2,W5,W6, W8,W11

PART DESIGNATION

ITEM	PART NUMBER	PART DESIGNATION	DESCRIPTION	QTY.
45	5795-10445-00	P1	RIBBON ASSY., 40P	1
44				
43	5791-09444-00	J2	CONNECTOR, 10P MALE 2391 09-65-1101	1
42	5791-09027-00	J3	CONNECTOR, 9P MALE 2391 09-06-1091	1
41	5791-09038-00	J1	CONNECTOR, 6P MALE 2391 09-65-1061	1
40				
39	5043-09065-00	C29, C30	CAPACITOR, 470PF 50V +/- 20	2
38	5043-09845-00	C66, C69-C83	CAPACITOR, 1000PF 50V +/-80	16
37	5043-08996-00	C67	CAPACITOR, .1MFD 50V +/-20	1
36	5040-09421-00	C68	CAPACITOR, 100MFD 25V +50 -10	1
35	5043-08980-00	C1-C28, SEE C31-C65 NOTE 2	CAPACITOR, .01MFD 50V +80 -20	50
34				
33	5551-09822-00	L1	INDUCTOR, 4.7UH, 3A	1
32				
31	5019-09362-00	SR1 THRU SR4	S.I.P., 4.7K 9R 10P 5%	4

ITEM	PART NUMBER	PART DESIGNATION	DESCRIPTION	QTY.
30	5010-09534-00	W3	RESISTOR, C.F., 0 OHM 1/4 WATT	1
29	5010-08991-00	R8, R9	RESISTOR, C.F., 4.7K OHM 5% 1/4 WATT	2
28	5010-09187-00	R10 THRU R16	RESISTOR, C.F., 150 OHM 5% 1/4 WATT	7
27	5010-09358-00	R1 THRU R7	RESISTOR, C.F., 1K OHM 5% 1/4 WATT	7
26	5700-08985-00		SOCKET, 40 PIN	2
25	5700-10176-00		SOCKET, 28 PIN	15
24	5700-09004-00		SOCKET, 24 PIN	2
23	5700-10389-00		SOCKET, 18 PIN	2
22				
21	5019-09239-00	U30	DIP, 4.7K 15R 16 5%	1
20	5671-09411-00	U65	LED DISPLAY, 7-SEG.	1
19				
18	5430-08972-00	U29	I.C., 6820/6821 PIA	1
17	5310-08975-00	U18	I.C., 4049 HEX INVERTER	1
16	5281-09486-00	U48	I.C., 74LS374, OCTAL D-TYPE FLIP-FLOP	1
15	5281-09308-00	U33	I.C., 74LS245 OCTAL BUS TRANCEIVER	1
14	5281-09867-00	U34, 46, 47	I.C., 74LS244 OCTAL BUF	3
13	5281-09733-00	U53	I.C., 74LS174 HEX FLIP-FLOP	1
12	5280-09010-00	U42	I.C., 74154 4 TO 16 LINE DECODER	1
11	5281-09246-00	U43, 56	I.C., 74LS139, DUAL 2 TO 4 LINE DECODER	2
10	5281-09745-00	U9, 54	I.C., 74LS138 3 TO 8 DECODER	2
9	5281-09737-00	U63	I.C., 74LS86 QUAD 2-INPUT EXOR	1
8	5281-09487-00	U31, 51, 52, 59	I.C., 74LS74 DUAL D-TYPE FLIP-FLOP	4
7	5280-09407-00	U66	I.C., 7447 BCD TO 7-SEG DECODER	1
6	5281-09500-00	U19, 57, 61	I.C., 74LS32 QUAD 2-INPUT OR	3
5	5281-09235-00	U55, 64	I.C., 74LS10 TRIPLE 3-INPUT NAND	2
4	5281-09743-00	U17, 32, 60	I.C., 74LS08 QUAD 2-INPUT AND	3
3	5281-09215-00	U28, 58	I.C., 74LS04 HEX. INVERTER	2
2	5281-09499-00	U62	I.C., 74LS00 QUAD 2-INPUT NAND	1
1	5771-10315-00		BARE PC BOARD	1

BILL OF MATERIALS

REV	DESCRIPTION OF CHANGE	ECN NO DATE
	NPR	11482 9-9-83

* W1 & W4 USED FOR 2764
W1 & W5 USED FOR 27128

POWER TABLE

REFERENCE DESIG	DESCRIPTION	+5V	GND
IC62	74LS00	14	7
IC28.58	74LS04	14	7
IC17-32.60	74LS08	14	7
IC55.64	74LS10	14	7
IC19,57 61	74LS32	14	7
IC66	7447	16	8
IC31.51.62,59	74LS74	14	7
IC63	74LS86	14	7
IC9,54	74LS138	16	8
IC43.56	74LS139	16	8
IC42	74154	24	12
IC53	74LS174	16	8
IC34.44,47	74LS244	20	10
IC33	74LS245	20	10
IC48	74LS374	20	10
IC18	4049	1	8
IC29	6821	20	1
IC49.50	PROM	18	9
IC44.45	SPEC. CHIP	29	24

REV	DESCRIPTION OF CHANGE	ECN NO. DATE
	NPR	11482 9-1-83

SHEET 1 ADDRESS BUS
SHEET 1 DATA BUS
SHEET 1 CONTROL BUS

U44 45-36 U44 45-18

6821

RESET R/W E CS2 CS0 CS1 RS1 RS0 IRQA IRQB D7 D6 D5 D4 D3 D2 D1 D0 CA1 CA2 CB1 CB2 PA0 PA1 PA2 PA3 PA4 PA5 PA6 PA7 PB0 PB1 PB2 PB3 PB4 PB5 PB6 PB7

ALL 4049

74LS04

30

ALL 4.7K

AUTO UP ADVANCE E COIN H.S. RESET L COIN SLAM TILT KEY GND

KEY PB0 PB1 PB2 PB3 PB4 PB5 PB6 PB7

E1 E2 E3 E4 E5 E6 E7 ALL 1KΩ

ALL 1000 pf

7447 7SEG LED 450Ω

SPARE GATES

74LS374 74LS08 74LS86 74LS04

W3

COUNT 240 Q/8 MS IRQ

C30 470 pf C29 470 pf

74LS139

I/O 4MHZ E HALT WRX WINEN BA-BS

U44 45-35 2D4 2B3 1D3

74LS04 74LS32 74LS08 74LS00 74LS74 74LS244 74LS245

C9XX C9BX C9AX C9ØX CAXX CBXX

U44,45-1 U44,45-5 U44,45-25

IA3 ID3 ID2

WINEN+(BA·BS)

U28-8,2C4 2C1, U32-5,1

U45-40 U59-9,2B3 U44-40 6WINHL PI-40 3WINHL PI-39

DATA ADDRESS BUS

2D4 R/W

SPECIAL CHIP UPPER 45 LOWER 44

SR1 SR2 SR3 SR4 ALL 4.7K

U32-4,2C1 U32-2,2C1

KEY J1-6 J1-5 J1-4 J1-3 J1-2 J1-1 CGG .001μF CGB 100μF CGT .1μF L1 4.7μH +5V

2899-91

BILL OF MATERIAL

ITEM NO.	PART NO.	PART DESIGNATION	DESCRIPTION	NO. REQ'D
1	5712-09869-00		BARE P.C. BOARD	1
2	5280-09013-00	IC1	I.C., 7404 HEX INVERTER	1
3	5430-08972-00	IC2	I.C., MC6821 PIA	1
4	5281-09485-00	IC3, IC5, IC7	I.C., 74LS257	3
5	5310-08975-00	IC4, IC6, IC8, IC9	I.C., 4049 INV. HEX BUFFER	4
6	5010-08991-00	R1, R2, R3	RESISTOR, 4.7KΩ 1/4W 5%	3
7	5019-09786-00	SR1	SIP 4.7KΩ, 5R 6-PIN 5% .125 W/R @ 70°C	1
8	5019-09362-00	SR2, SR3	SIP 4.7KΩ, 9R 10-PIN 5% .125 W/R @ 70°C	2
9	5043-09845-00	C10, C13 THRU C60	CAP, AXIAL, 1000 pF, 50V	49
10	5043-08996-00	C11	CAPACITOR, AXIAL .1 μF 50V ± 20%	1
11	5040-09421-00	C12	CAPACITOR, RADIAL 100 μF 25V ± 10%	1
12	5551-09822-00	L1	COIL, 4.7 μH 3A	1
13	5551-09825-00	L2 THRU L25	COIL, 4.7 μH 30mA	24
14	5791-09043-00	3J2	HEADER 12-PIN, 09-65-1121	1
15	5791-09074-00	3J3	HEADER 15-PIN, 09-65-1151	1
16	5795-09540-00	3P1	20 PIN RIBBON CABLE ASSY.	1
17	5043-08980-00	C1 THRU C9	CAP, AXIAL, CERAMIC, .01 MFD 50V ± 80-20%	9
18	5000-09534-00	W1	RESISTOR, C.F. 0Ω	0

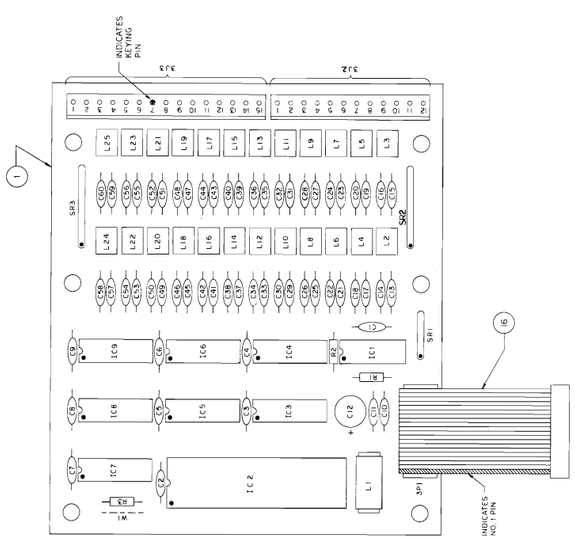

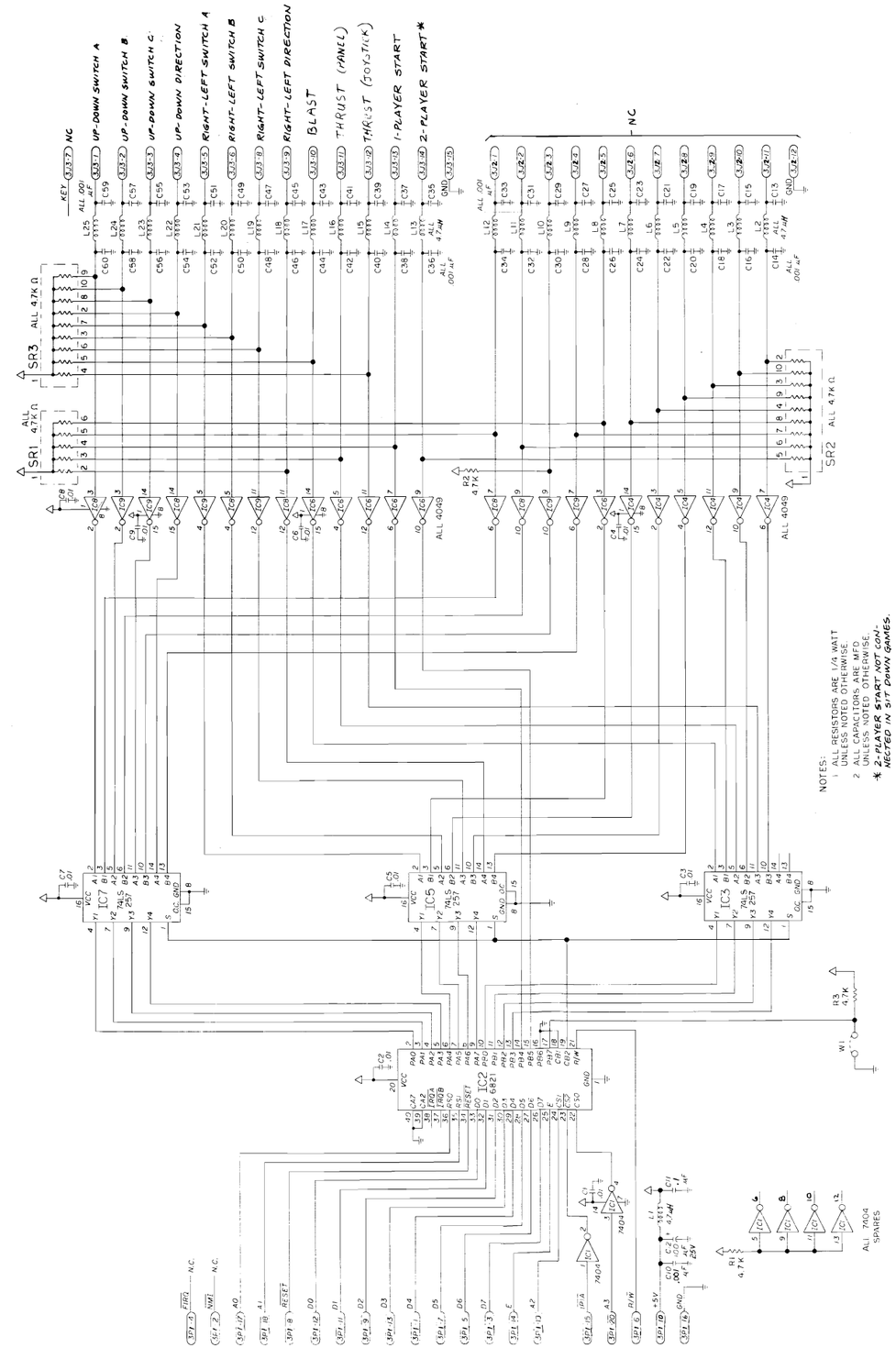

Interface Board Assembly and Logic Diagrams

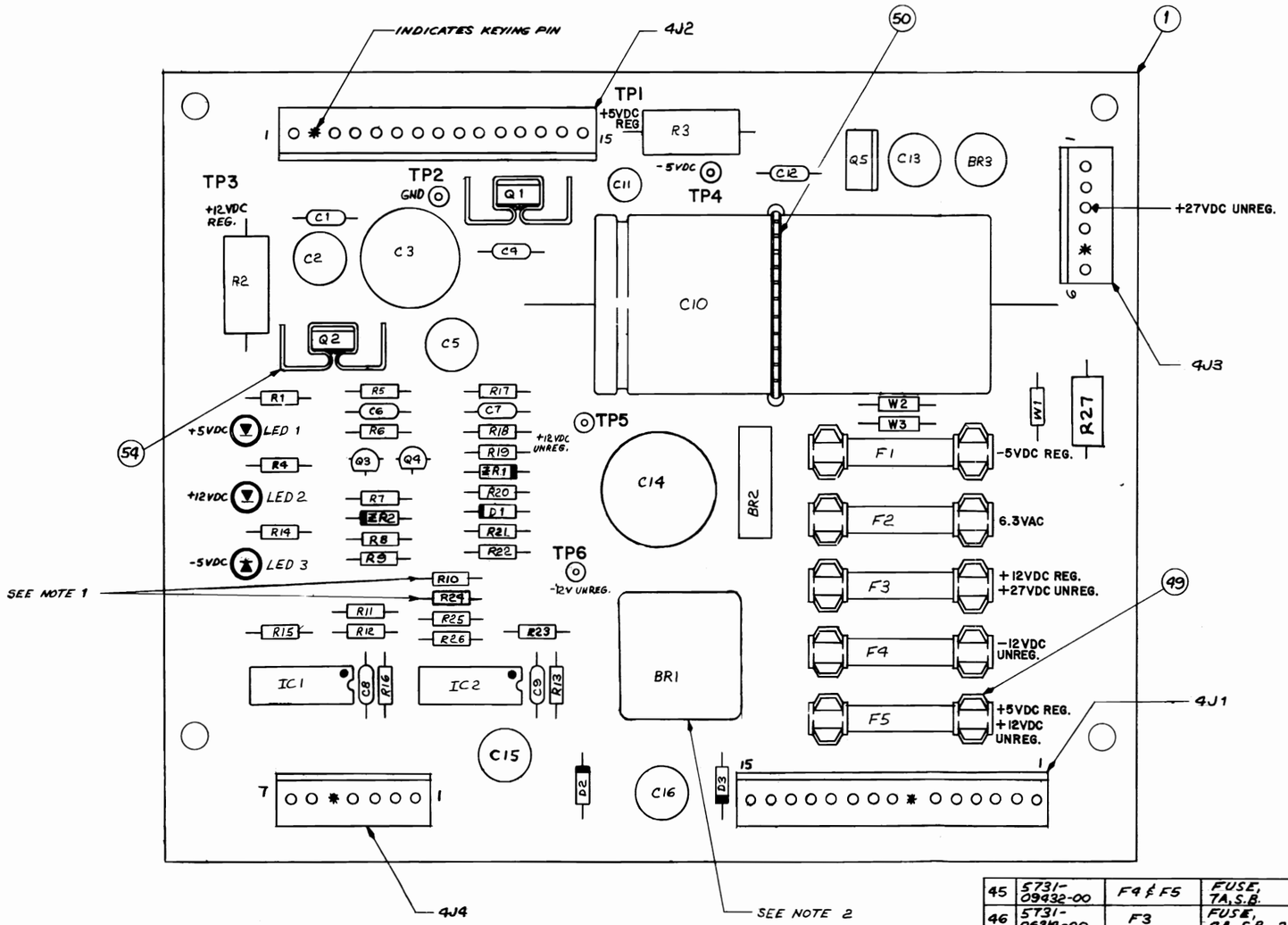

NOTES:
1. REMOVE R24 IF +5VDC IS GREATER THEM 5.25 VDC, REMOVE R10 IF +5VDC IS LESS THAN 4.75 VDC.
2. BR1 MUST BE MOUNTED 1/8" ABOVE SURFACE OF BOARD.
3. FOR SCHEMATIC REFER TO 16-8811.

BILL OF MATERIAL

ITEM NO.	PART NO.	PART DESIGNATION	DESCRIPTION	REQ'D NO.
1	5773-09679-00		BARE P.C. BOARD	1
2	5010-09085-00	R23	RESISTOR, 1.5K 5%, 1/4W	1
3	5010-09541-00	R13, R15	RESISTOR, 2.7K 2%, 1/4W	2
4	5010-09508-00	R21	RESISTOR, 270Ω 2%, 1/4W	1
5	5010-09428-00	R20	RESISTOR, 1.5K 2%, 1/4W	1
6	5010-09509-00	R16	RESISTOR, 1.1K 2%, 1/4W	1
7	5010-09510-00	R7	RESISTOR, 12K 2%, 1/4W	1
8	5010-09314-00	R4	RESISTOR, 1.2K 5%, 1/4W	1
9	5010-09416-00	R1, R14	RESISTOR, 470Ω 5%, 1/4W	2
10	5013-09542-00	R11	RESISTOR, 7.32K 1%, 1/4W	1
11	5013-09427-00	R12	RESISTOR, 4.99K 1%, 1/4W	1
12	5013-09426-00	R25	RESISTOR, 2.15K 1%, 1/4W	1
13	5012-09429-00	R3	RESISTOR, .12Ω 5%, 5W	1
14	5012-09512-00	R2	RESISTOR, .27Ω 5%, 5W	1
15	5012-09037-00	R27	RESISTOR, 0.4Ω 5%, 3W	1
16	5013-09665-00	R26	RESISTOR, 5.11K 1%, 1/4W	1
17	5010-09434-00	R6, R18	RESISTOR, C.F. 22Ω ±5% 1/4W	2
18	5010-09036-00	R5, R9, R17 & R22	RESISTOR, C.F. 100Ω ±5% 1/4W	4
19	5010-09039-00	R8, R19	RESISTOR, C.F. 10Ω ± 5%, 1/4W	2
20	5010 09534-00	W1	RESISTOR, 0Ω	1
21	5043-08996-00	C6, C7	CAPACITOR, 0.1 MF CERAMIC +80% -20% 50V	2
22	5040-09421-00	C2, C16	CAPACITOR, 100 MFD. 25V RADIAL +50% -10%	2
23	5040-09422-00	C15	CAPACITOR, 47 MFD. 50V RADIAL +50% -10%	1
24	5040-09420-00	C3	CAPACITOR, 1000 MFD. 25 V RADIAL +75% -10%	1
25	5040-09419-00	C10	CAPACITOR, 18,000 MFD 20V AXIAL +75% -10%	1
26	5040-09423-00	C5	CAPACITOR, 330 MFD 10V RADIAL +50% -10%	1
27	5040-09504-00	C14	CAPACITOR 4700 MFD 35V RADIAL +50% -10%	1
28	5043-09446-00	C1, C4 & C12	CAPACITOR .1 MFD 50V AXIAL Z5U -20 +80%	3
29	5043-08065-00	C9	CAPACITOR 470 PFD 50V AXIAL X7R ± 10%	1
30	5043-09492-00	C8	CAPACITOR 100 PFD 50V AXIAL S2L ± 5%	1
31	5040-09506-00	C13	CAPACITOR 220 MFD 16V RADIAL +50% -10%	1
32	5040-09493-00	C11	CAPACITOR 22 MFD 10V RADIAL +50% -10%	1
33	5070-06258-00	D1, D2 & D3	DIODE, IN4001	3
34	5075-09406-00	ZR1	ZENER, IN5234 ± 5% (6.2V)	1
35	5075-09662-00	ZR2	ZENER IN5244 ± 5% (14V)	1
36	5190-09430-00	Q3, Q4	TRANSISTOR, MPS A55	2
37	5130-09661-00	Q1, Q2	SCR 8 AMP, 100 V	2
38	5250-09515-00	Q5	VOLTAGE REGULATOR, 7905	1
39	5460-09424-00	IC1, IC2	VOLTAGE REGULATOR, 723	2
40	5100-09490-00	BR1	BRIDGE RECTIFIER, 35 AMP, 200V	1
41	5100-09513-00	BR2	BRIDGE RECTIFIER, 4.0A, 50V	1
42	5100-09514-00	BR3	BRIDGE RECTIFIER, 1.0A, 50V	1
43	5671-09018-00	LED1, LED2, LED3	LED, RED	3
44	5829-09248-00	TP1 — TP6	TERMINAL # 1502-1 (TEST POINT)	4
45	5731-09432-00	F4 & F5	FUSE, 7A, S.B.	2
46	5731-06319-00	F3	FUSE, 9A, S.B., 250V	1
47	5731-06569-00	F1	FUSE, 1A, S.B. 250V	1
48	5731-09651-00	F2	FUSE, 5A, S.B. 250V	1
49	5732-09178-00		FUSEHOLDER,	10
50	03-7520		TIE WRAP	1
51	5791-09074-00	4J1 & 4J2	HEADER, 15 PIN 09-65-1151	2
52	5791-09030-00	4J3	HEADER, 6 PIN 09-65-1061	1
53	5791-09497-00	4J4	HEADER, 7 PIN 09-65-1071	1
54	5705-09663-00		HEAT SINK	2
	5705-09698-00		HEAT SINK	0
55	5010-09682-00	R10	RESISTOR C.F. 51K ±5% 1/4 W	1
56	5010-09324-00	R24	RESISTOR, C.F. 27K, ±5% 1/4W	1

Ⓐ

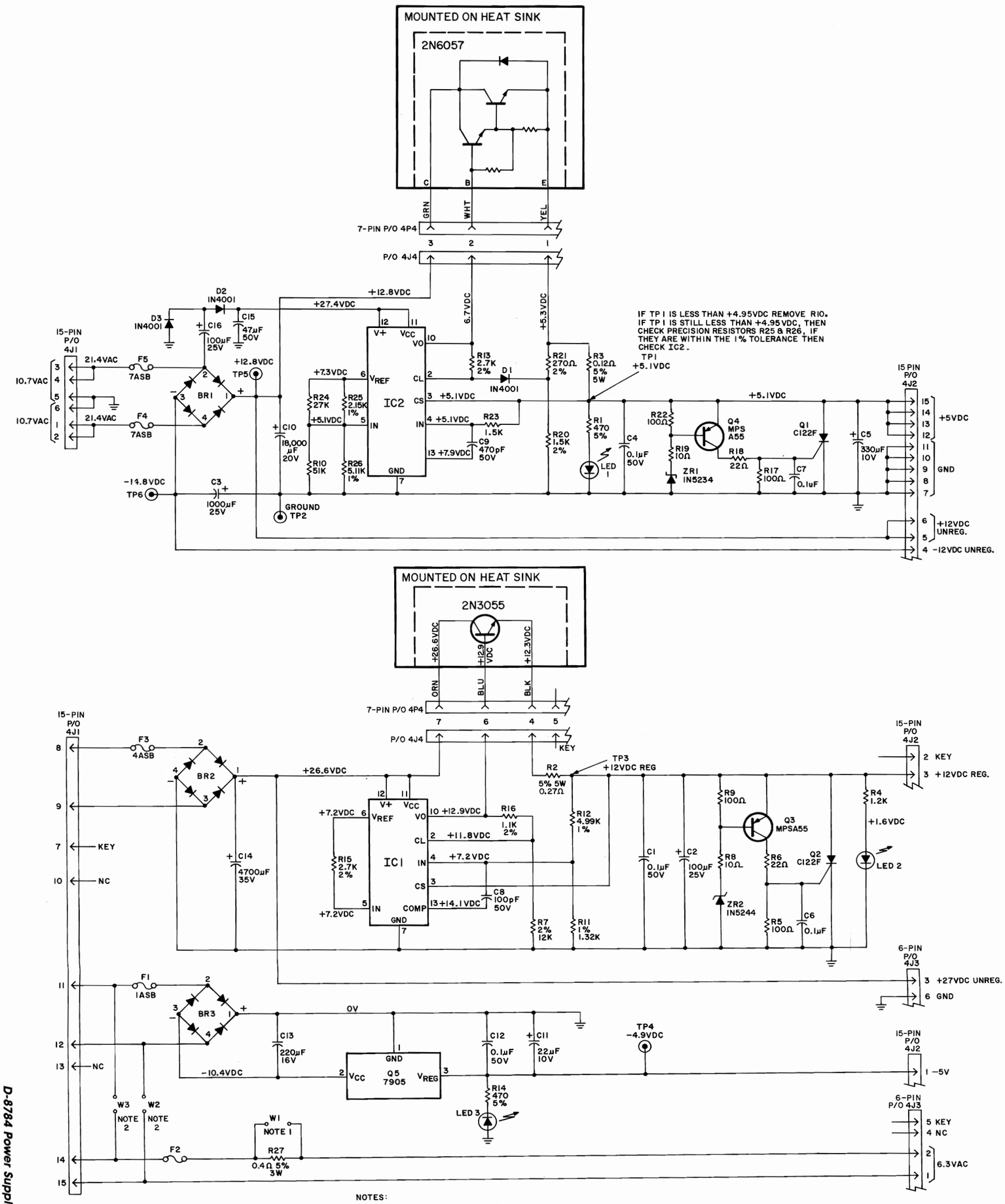
MOUNTED ON HEAT SINK
2N6057
C
B
E
GRN
WHT
YEL
7-PIN P/O 4P4
P/O 4J4
+12.8VDC
+27.4VDC
6.7VDC
+5.3VDC
D2
IN4001
D3
IN4001
C15
47µF
50V
C16
100µF
25V
15-PIN
P/O
4J1
21.4VAC
F5
7ASB
F4
7ASB
10.7VAC
10.7VAC
BR1
TP5
+12.8VDC
IC2
V+
VCC
VO
VREF
CL
CS
IN
GND
+7.3VDC
+5.1VDC
+5.1VDC
+7.9VDC
R24
27K
R25
2.15K
1%
R26
5.11K
1%
R10
5K
R13
2.7K
2%
R21
270Ω
2%
R3
0.12Ω
5%
5W
R20
1.5K
2%
R23
1.5K
C9
470pF
50V
D1
IN4001
C10
18,000
µF
20V
C3
1000µF
25V
TP6
-14.8VDC
GROUND
TP2
IF TP1 IS LESS THAN +4.95VDC REMOVE R10.
IF TP1 IS STILL LESS THAN +4.95 VDC, THEN
CHECK PRECISION RESISTORS R25 & R26, IF
THEY ARE WITHIN THE 1% TOLERANCE THEN
CHECK IC2.
TP1
+5.1VDC
R1
470
5%
LED
1
C4
0.1µF
50V
R22
100Ω
R19
10Ω
ZR1
IN5234
Q4
MPS
A55
R18
22Ω
R17
100Ω
C7
0.1µF
Q1
C122F
C5
330µF
10V
+5.1VDC
15 PIN
P/O
4J2
+5VDC
GND
+12VDC
UNREG.
-12VDC UNREG.
MOUNTED ON HEAT SINK
2N3055
+26.6VDC
+12.9
VDC
+12.3VDC
ORN
BLU
BLK
7-PIN P/O 4P4
P/O 4J4
KEY
15-PIN
P/O
4J1
F3
4ASB
BR2
+26.6VDC
TP3
+12VDC REG
R2
5% 5W
0.27Ω
15-PIN
P/O
4J2
2 KEY
3 +12VDC REG.
IC1
V+
VCC
VO
+12.9VDC
VREF
+7.2VDC
CL
+11.8VDC
IN
+7.2VDC
CS
COMP
+14.1VDC
GND
+7.2VDC
+7.2VDC
R16
1.1K
2%
R15
2.7K
2%
R12
4.99K
1%
R7
2%
12K
R11
1%
1.32K
C8
100pF
50V
C14
4700µF
35V
KEY
NC
R9
100Ω
Q3
MPSA55
R4
1.2K
+1.6VDC
C1
0.1µF
50V
C2
100µF
25V
R8
10Ω
R6
22Ω
Q2
C122F
LED 2
ZR2
IN5244
R5
100Ω
C6
0.1µF
6-PIN
P/O
4J3
3 +27VDC UNREG.
6 GND
F1
1ASB
BR3
0V
C13
220µF
16V
-10.4VDC
GND
Q5
7905
VREG
VCC
C12
0.1µF
50V
C11
22µF
10V
TP4
-4.9VDC
15-PIN
P/O
4J2
1 -5V
NC
R14
470
5%
LED 3
W3
NOTE
2
W2
NOTE
2
W1
NOTE 1
F2
R27
0.4Ω 5%
3W
6-PIN
P/O 4J3
5 KEY
4 NC
2
1
6.3VAC
NOTES:
1. W1 IS NOT USED ON UPRIGHT GAMES.
2. W2 & W3 ARE NOT USED.
3. 1ASB 250V.

GAME NAME	SPLAT	
ITEM NO.	PART DESIGNATION	PART NUMBER
15	LABEL PCB ASSM ID	16-8850-33
20	W1	NOT USED
	W2 W3	NOT USED
48	FUSE 1 A.S.B.	5731-06569-00
60	R27 0.4Ω 5% 3W	5010-09037-00

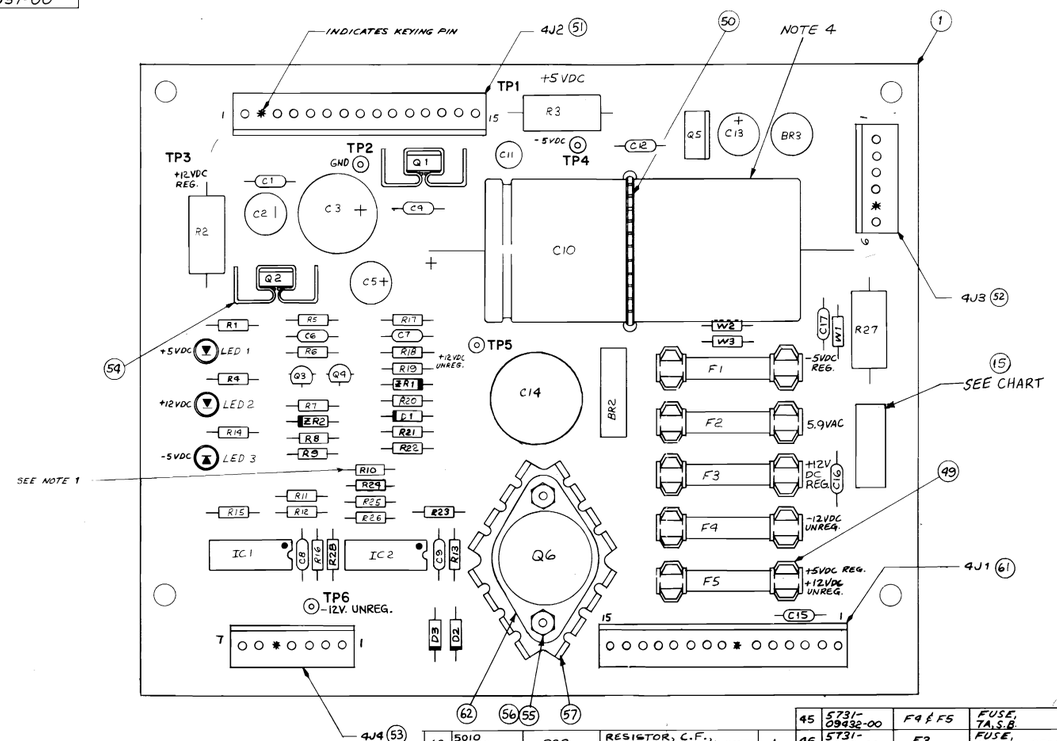

NOTE:
1. REMOVE R10 IF +5V DC IS LESS THAN 4.95V DC.
2. FOR SCHEMATIC REFER TO 16-8849.
3. APPLY RTV UNDER CAPACITOR A/R
4. LABEL LOCATION IS APPROXIMATE.

ITEM NO.	PART NO.	PART DESIGNATION	DESCRIPTION	REQ'D NO.
63	5010-08998-00	R28	RESISTOR, C.F. 2.2K OHM 5% 1/4 WATT	1
62	5701-09652-00		THERMAL PAD TO-3	1
61	5791-10326-00	4J1	HEADER 15 PIN 09-74-1151 09-74-1151	1
60	SEE CHART	R27	SEE CHART	1
59	4006-01003-06		6-32 x 3/8 P-PH-S	2
56	4406-01117-00		6-32 HEX NUT	2
57	SEE CHART	R27	SEE CHART	1
55	5010-09882-00	R10	RESISTOR C.F. 51K ± 5% 1/4 W	1
55	5010-09329-00	R24	RESISTOR, C.F. 47K ± 5% 1/4 W	1

ITEM NO.	PART NO.	PART DESIGNATION	DESCRIPTION	REQ'D NO.
45	5731-09932-00	F4 & F5	FUSE, T.A.S.B.	2
46	5731-06314-00	F3	FUSE, 9A, S.B., 250V	1
47	5731-06569-00	F1	FUSE, 1A, S.B. 250V	1
48	SEE CHART	F2	3A, S.B.	1
49	5732-09178-00		FUSEHOLDER,	10
50	03-7620		TIE WRAP	1
51	5791-09074-00	4J2	HEADER, 15 PIN 09-65-1151	2
52	5791-03038-00	4J3	HEADER, 6 PIN 09-65-1061	1
53	5791-03039-00	4J4	HEADER, 7 PIN 09-65-1071	1
54	5705-09563-00		HEAT SINK	2
	5705-09698-00		HEAT SINK	0

BILL OF MATERIAL

ITEM NO.	PART NO.	PART DESIGNATION	DESCRIPTION	REQ'D NO.
1	5773-09679-		BARE P.C. BOARD	1
2	5010-09085-00	R23	RESISTOR, 1.5K 5%, 1/4W	1
3	5010-09541-00	R13, R15	RESISTOR, 2.7K 2%, 1/4W	2
4	5010-09508-00	R21	RESISTOR, 270Ω 2%, 1/4 W	1
5	5010-09428-00	R20	RESISTOR, 1.5K 2%, 1/4 W	1
6	5010-09509-00	R16	RESISTOR, 1.1K 2%, 1/4 W	1
7	5010-09510-00	R7	RESISTOR, 12K 2%, 1/4 W	1
8	5010-09314-00	R4	RESISTOR, 1.2K 5%, 1/4 W	1
9	5010-09916-00	R1, R14	RESISTOR, 470Ω 5%, 1/4W	2
10	5013-09542-00	R11	RESISTOR, 7.32K 1%, 1/4 W	1
11	5013-09927-00	R12	RESISTOR, 4.99K 1%, 1/4 W	1
12	5013-09426-00	R25	RESISTOR, 2.15K 1%, 1/4 W	1
13	5012-09429-00	R3	RESISTOR, .12Ω 5%, 5 W	1
14	5012-09512-00	R2	RESISTOR, .27Ω 5%, 5 W	1
15	16-9850-75	———	LABEL PCB ASSEMID	1
16	5013-09665-00	R26	RESISTOR, 5.11KΩ 1%, 1/4 W	1
17	5010-09434-00	R6, R18	RESISTOR, C.F. 68Ω ±5% 1/4 W	2
18	5010-09036-00	R5, R9, R17, R22	RESISTOR, C.F. 100Ω ± 5% 1/4 W	4
19	5010-09039-00	R8, R19	RESISTOR, C.F. 10Ω ± 5% 1/4 W	2
20	SEE CHART	———	RESISTOR, 0Ω	3
21	5043-08396-00	C6, C7	CAPACITOR, 0.1 MF CERAMIC +80% -20% 50V	2
22	5040-09821-00	C2, C16	CAPACITOR, 100 MFD, 25V RADIAL +50% -10%	2
23	5040-09422-00	D2, D3	DIODE, IN4003	1
24	5040-09920-00	C3	CAPACITOR, 1000 MFD 25V RADIAL +75% -10%	1
25	5040-09419-00	C10	CAPACITOR, 18,000 MFD 20V AXIAL +75% -10%	1
26	5040-09423-00	C5	CAPACITOR 330 MFD 10V RADIAL +50% -10%	1
27	5040-09504-00	C14	CAPACITOR 4700 MFD 35V RADIAL +50% -10%	1
28	5043-09446-00	C1, C4, C12, C15, C16, C17	CAPACITOR .1 MFD 50V AXIAL	3
29	5043-08065-00	C9	CAPACITOR 470 PFD 50V AXIAL XTR ± 10%	1
30	5043-09492-00	C8	CAPACITOR 100 PFD 50V AXIAL 5% ± 5%	1
31	5040-09506-00	C13	CAPACITOR 220 MFD 16V RADIAL +50% -10%	1
32	5040-09493-00	C11	CAPACITOR 22 MFD 10V RADIAL +50% -10%	1
33	5070-06258-00	D1, D2 & D3	DIODE, IN4001	3
34	5075-09406-00	ZR1	ZENER, IN5234 ± 5% (6.2V)	1
35	5075-09662-00	ZR2	ZENER IN5249 ± 5% (14V)	1
36	5190-09430-00	Q3, Q4	TRANSISTOR, MPS A55	2
37	5130-09661-00	Q1, Q2	SCR 8 AMP, 100 V	2
38	5250-09515-00	Q5	VOLTAGE REGULATOR, 7905	1
39	5960-09424-00	IC1, IC2	VOLTAGE REGULATOR, 723	2
40	5100-09890-00	Q6	DUAL RECTIFIER, 30 AMP, 100V	1
41	5100-09513-00	BR2	BRIDGE RECTIFIER, 4.0A, 50V	1
42	5100-09514-00	BR1	BRIDGE RECTIFIER, 1.0A, 50V	1
43	5571-09018-00	LED1, LED2, LED3	LED, (LIGHT EMITTING RED DIODE)	3
44	5824-09248-00	TP2, TP4, TP5, TP6	TERMINAL #1502-1 (TEST POINT)	4

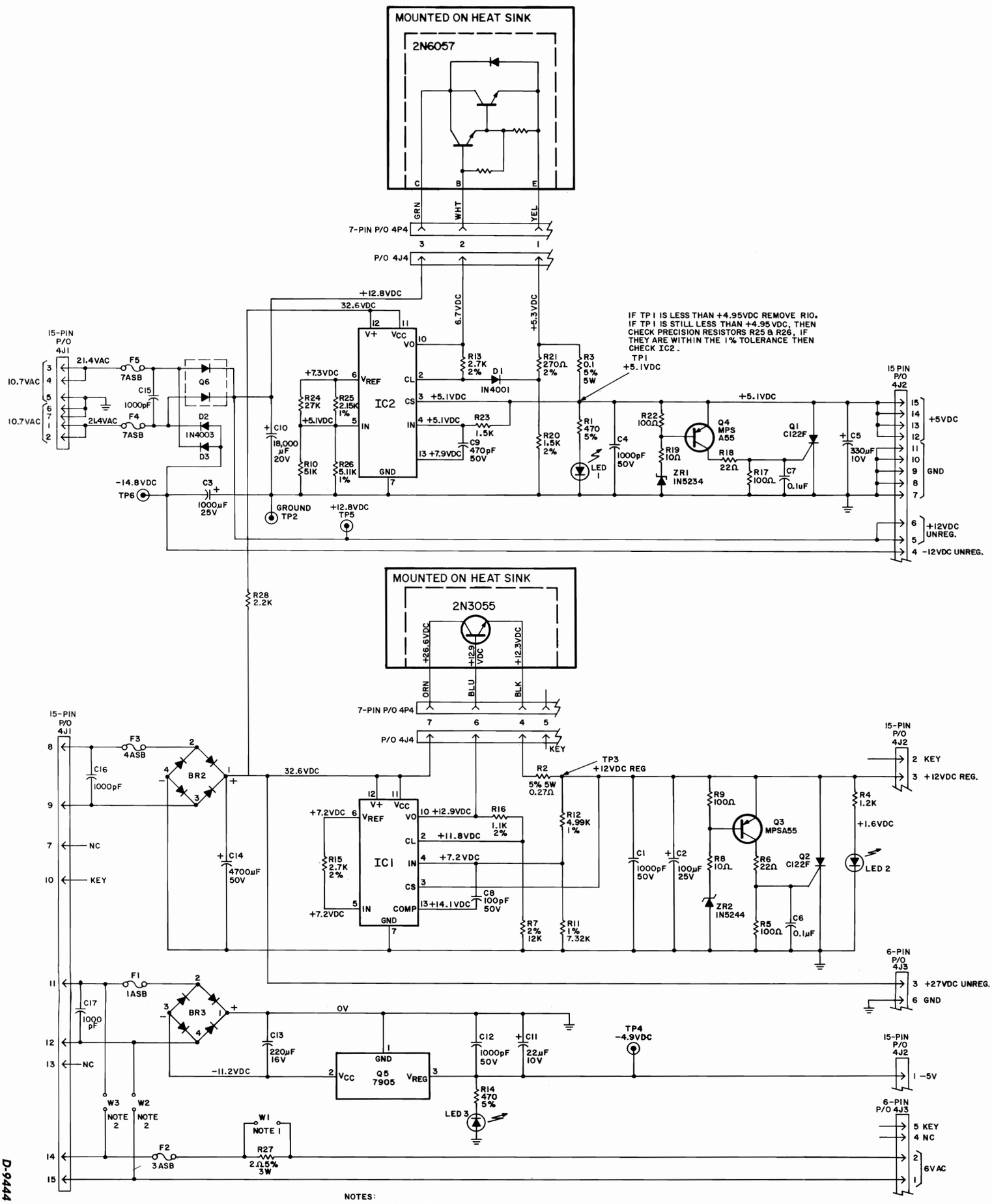
MOUNTED ON HEAT SINK
2N6057
C
B
E
GRN
WHT
YEL
7-PIN P/O 4P4
3
2
1
P/O 4J4
+12.8VDC
32.6VDC
6.7VDC
+5.3VDC
IF TP1 IS LESS THAN +4.95VDC REMOVE R10.
IF TP1 IS STILL LESS THAN +4.95VDC, THEN
CHECK PRECISION RESISTORS R25 & R26, IF
THEY ARE WITHIN THE 1% TOLERANCE THEN
CHECK IC2.
TP1
+5.1VDC
15-PIN
P/O
4J1
21.4VAC
10.7VAC
10.7VAC
21.4VAC
F5
7ASB
F4
7ASB
C15
1000pF
Q6
D2
1N4003
D3
+7.3VDC
+5.1VDC
+5.1VDC
+7.9VDC
IC2
R24
27K
R25
2.15K
1%
R26
5.11K
1%
R10
51K
+ C10
18,000
µF
20V
R13
2.7K
2%
D1
IN4001
R21
270Ω
2%
R3
0.1
5%
5W
R20
1.5K
2%
R1
470
5%
LED
1
C4
1000pF
50V
R23
1.5K
C9
470pF
50V
R22
100Ω
Q4
MPS
A55
R19
10Ω
ZR1
IN5234
R18
22Ω
R17
100Ω
C7
0.1uF
Q1
C122F
+ C5
330µF
10V
+5.1VDC
15 PIN
P/O
4J2
+5VDC
GND
+12VDC
UNREG.
-12VDC UNREG.
-14.8VDC
TP6
C3
1000µF
25V
GROUND
TP2
+12.8VDC
TP5
MOUNTED ON HEAT SINK
2N3055
+26.6VDC
+12.9
VDC
+12.3VDC
ORN
BLU
BLK
7-PIN P/O 4P4
7
6
4
5
P/O 4J4
KEY
R28
2.2K
15-PIN
P/O
4J1
F3
4ASB
BR2
C16
1000pF
32.6VDC
TP3
+12VDC REG
R2
5% 5W
0.27Ω
15-PIN
P/O
4J2
2 KEY
3 +12VDC REG.
+7.2VDC
+12.9VDC
+11.8VDC
+7.2VDC
+14.1VDC
IC1
R16
1.1K
2%
R12
4.99K
1%
R15
2.7K
2%
R7
2%
12K
R11
1%
7.32K
C8
100pF
50V
+ C14
4700µF
50V
NC
KEY
R9
100Ω
Q3
MPSA55
R4
1.2K
+1.6VDC
LED 2
C1
1000pF
50V
+ C2
100µF
25V
R8
10Ω
ZR2
IN5244
R6
22Ω
Q2
C122F
R5
100Ω
C6
0.1µF
6-PIN
P/O
4J3
3 +27VDC UNREG.
6 GND
F1
1ASB
BR3
C17
1000
pF
OV
C13
220µF
16V
-11.2VDC
Q5
7905
C12
1000pF
50V
+ C11
22µF
10V
TP4
-4.9VDC
15-PIN
P/O
4J2
1 -5V
NC
R14
470
5%
LED 3
W3
NOTE
2
W2
NOTE
2
W1
NOTE 1
F2
3ASB
R27
2Ω 5%
3W
6-PIN
P/O 4J3
5 KEY
4 NC
2
6VAC
1
NOTES:
1. W1 IS NOT USED ON UPRIGHT GAMES.
2. W2 & W3 ARE NOT USED.
3. 1ASB 250V.

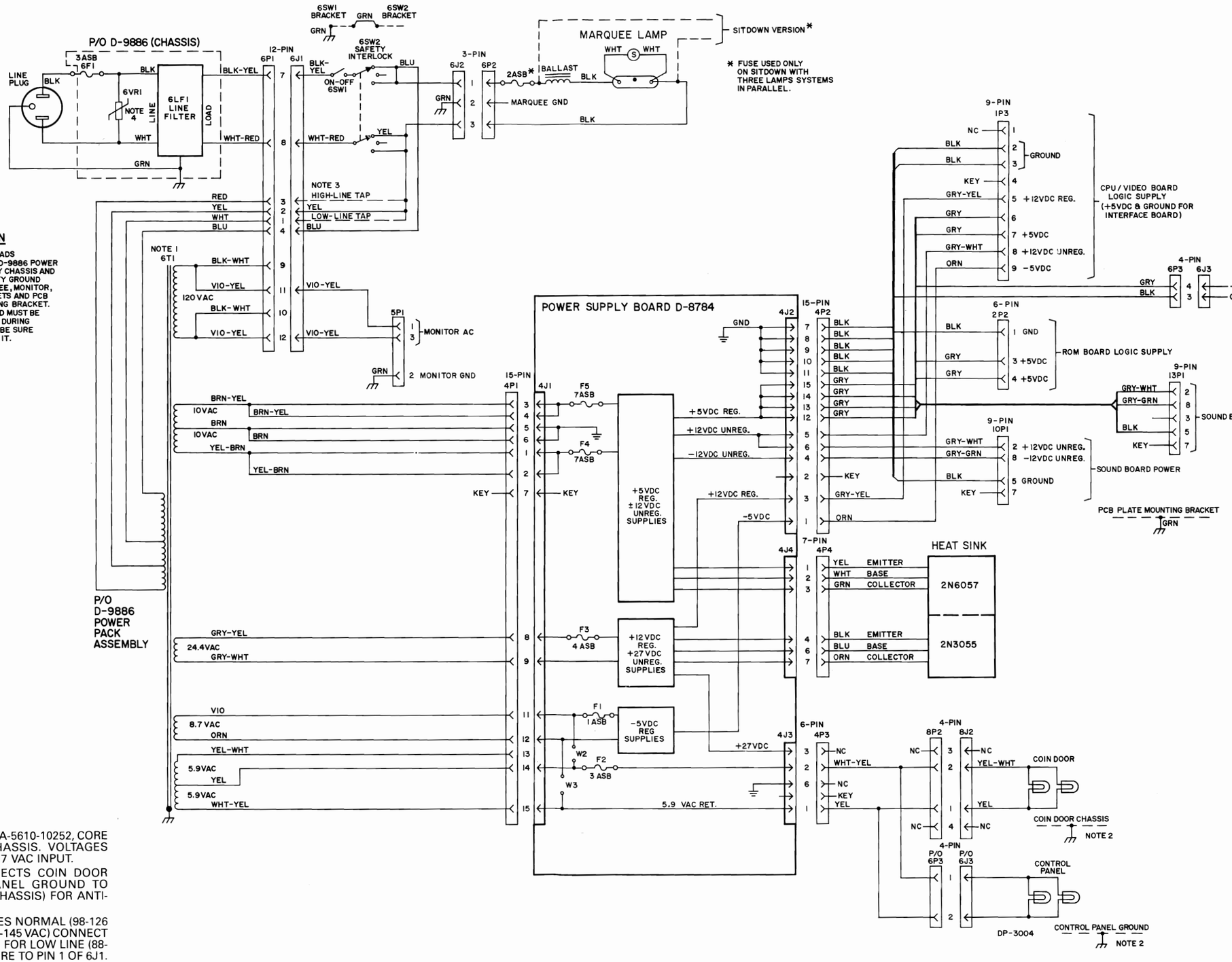

CAUTION

FOUR GREEN LEADS TERMINATE AT D-9886 POWER PACK ASSEMBLY CHASSIS AND PROVIDE SAFETY GROUND TO THE MARQUEE, MONITOR, SWITCH BRACKETS AND PCB PLATE MOUNTING BRACKET. IF A GREEN LEAD MUST BE DISCONNECTED DURING MAINTENANCE, BE SURE TO RECONNECT IT.

NOTES:

1. 6T1 TRANSFORMER, PART NO. A-5610-10252, CORE IS GROUNDED TO D-9886 CHASSIS. VOLTAGES SHOWN ARE MINIMUM FOR 117 VAC INPUT.
2. GROUND BRAID WIRE CONNECTS COIN DOOR GROUND AND CONTROL PANEL GROUND TO EARTH GROUND (ON D-9886 CHASSIS) FOR ANTI-STATIC PROTECTION.
3. CONNECTION SHOWN ASSUMES NORMAL (98-126 VAC) INPUT. FOR HIGH LINE (113-145 VAC) CONNECT YELLOW WIRE TO PIN 3 OF 6J1. FOR LOW LINE (88-113 VAC) CONNECT YELLOW WIRE TO PIN 1 OF 6J1.
4. 130V VARISTOR PART NO. 5017-09063 AND LINE FILTER PART NO. 5102-08895.

Power Wiring Diagram

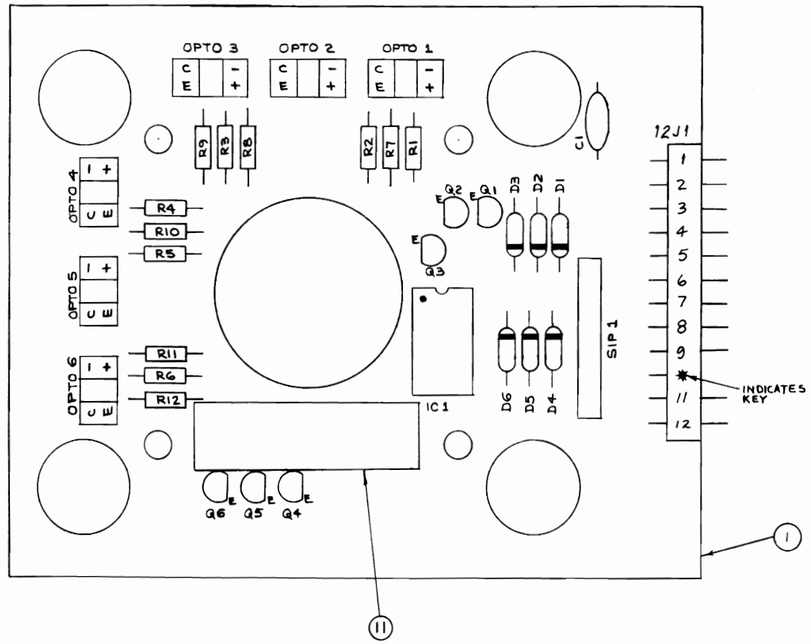

BILL OF MATERIAL				
ITEM NO.	PART NUMBER	PART DESIGNATION	DESCRIPTION	QTY. REQD
1	5772-10068-00		BARE P.C. BOARD	1
2	5490-09827-00	OPTO 1 THRU OPTO 6	OPTO INTER MODULE SWITCH	6
3	5310-09155-00	IC 1	I.C., 4011B CMOS QUAD 2-INP NAND GATE	1
4	5019-09362-00	SIP 1	10 PIN, 4.7K, SIP	1
5	5010-09768-00	R1 THRU R6	RESISTOR, 180Ω, 1/4 W	6
6	5160-08938-00	Q1 THRU Q6	TRANSISTOR, 2N4401 NPN	6
7	5070-08919-00	D1 THRU D6	DIODE, IN4148	6
8	5791-10142-00	12 J1	12 PH 2420 09-75-1121	1
9	5010-09034-00	R7 THRU R12	RESISTOR, 10K Ω, 1/4 W.	6
10	5043-08980-00	C1	CAP, AXIAL CERAMIC, .01 MFD 50V +80-20%	1
11	16-8850-59		LABEL - PCB ASSY ID	1

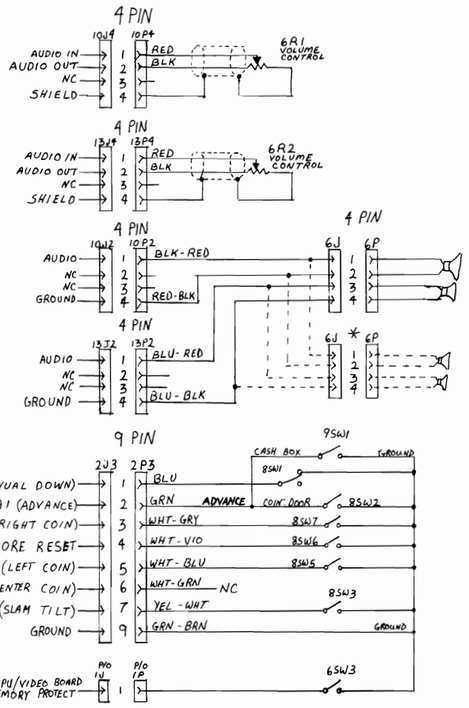

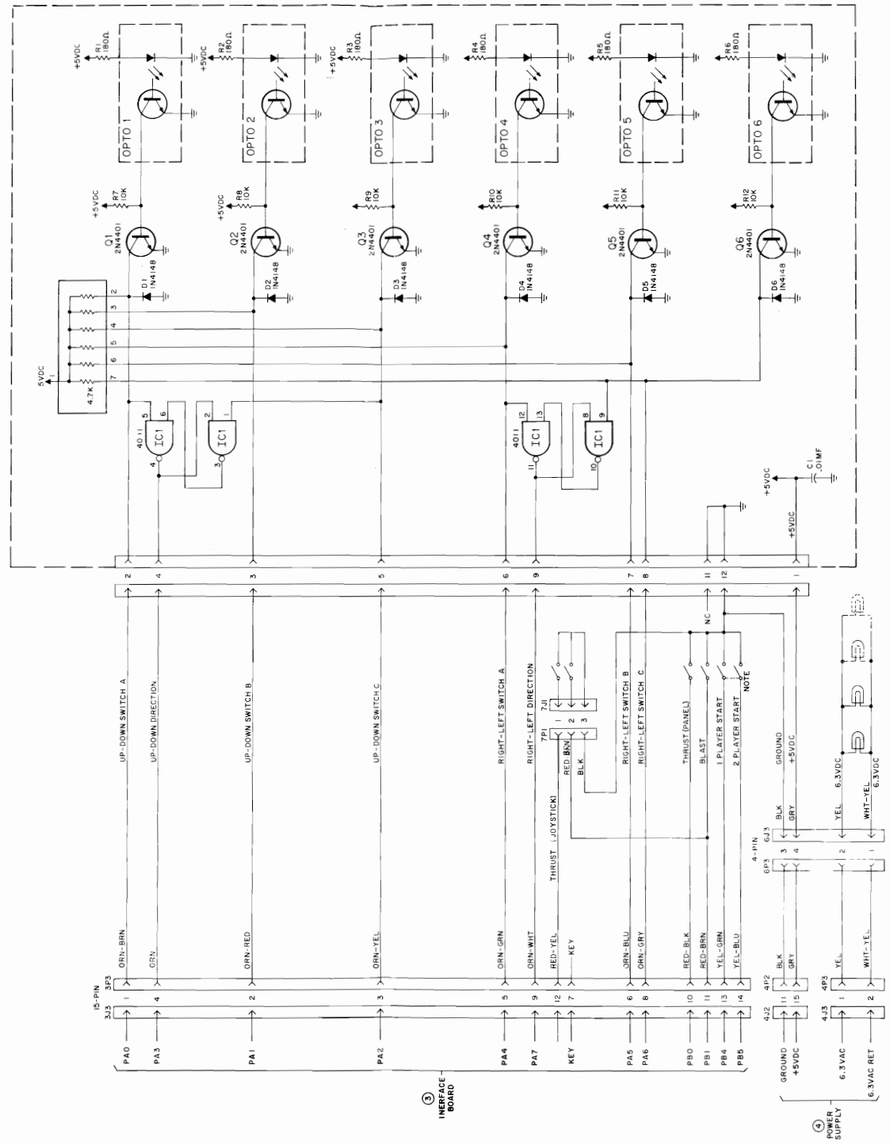

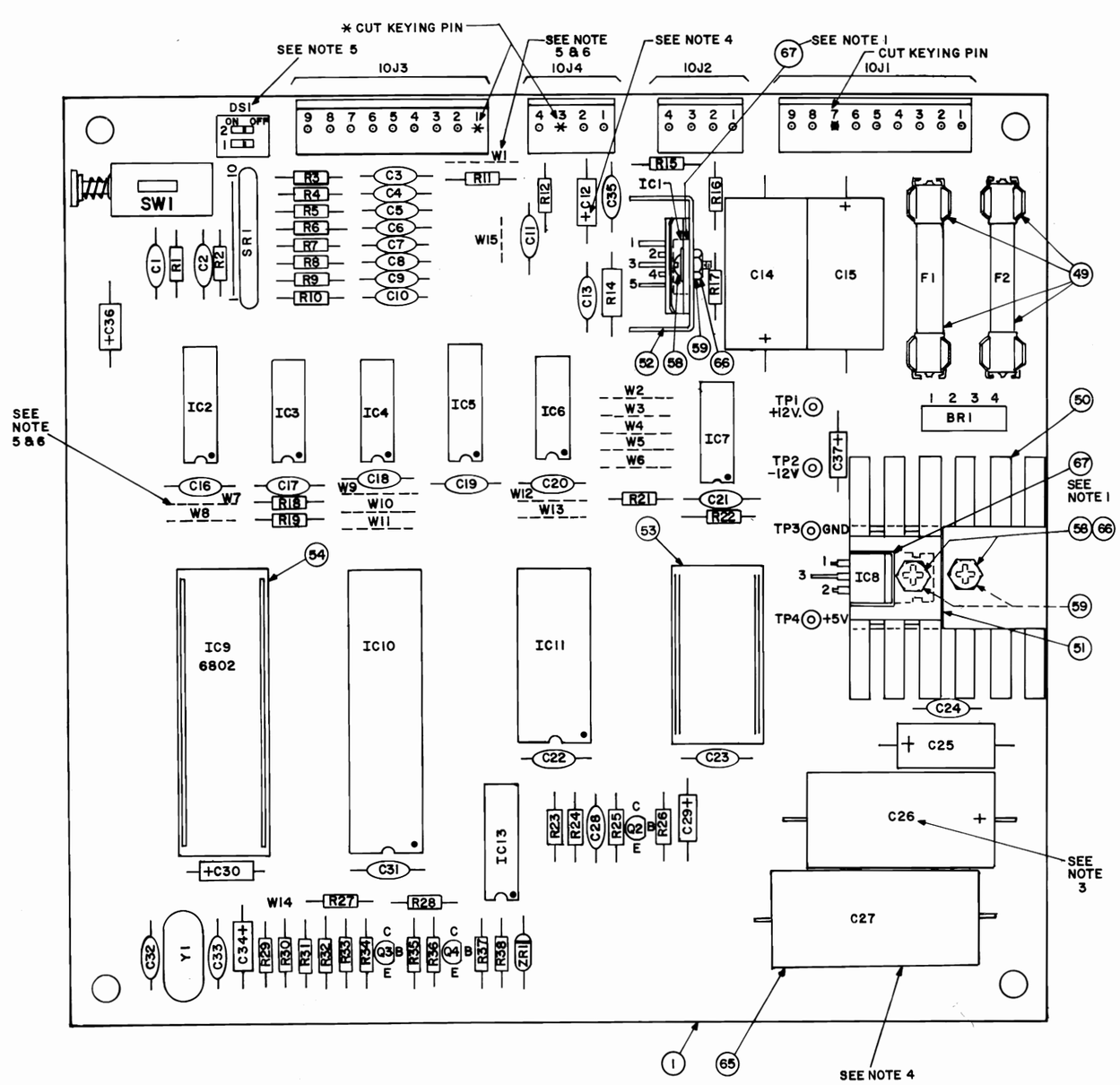

SOUND BOARD JUMPERS

JUMPERS USED	ROM TYPE	FORMAT	GAMES USED IN
W2, W5, W7, W9, W10, W15	2K x 8 2516, 2716	SOUND & SPEECH	GORGAR, BLACKOUT, FIREPOWER, BLACK KNIGHT, JUNGLE LORD, PHARAOH.
W1, W2, W5, W7, W9, W10, W15	2K x 8 2516, 2716	SOUND ONLY	DEFENDER VIDEO & PIN, SOLAR FIRE, BARRACORA, HYPERBALL, STARGATE, COSMIC GUNFIGHT, VARKON, TIME FANTASY.
W3, W4, W5, W7, W10, W15	4K x 8 2532	SOUND & SPEECH	SINISTAR (UPRIGHT & COCKPIT FRONT)
W1, W3, W4, W5, W7, W10, W15	4K x 8 2532	SOUND ONLY	ROBOTRON, JOUST VIDEO & PIN, BUBBLES, SINISTAR (COCKPIT REAR)
W1, W2, W4, W5, W7, W10, W15	2K x 8 2516, 2716	SOUND ONLY	WARLOCK
W1, W3, W6, W7, W9 W11, W12, W15	512 x 8 7641	SOUND ONLY	BIG STRIKE
W1, W3, W4, W5, W7, W10, W12, W14, W15	4K x 8 2532	SOUND ONLY	BLASTER

BILL OF MATERIAL

ITEM NO.	PART NO.	PART DESIGNATION	DESCRIPTION	REQ'D. NO.
1	01-2 01-146-6		BARE P.C. BOARD REV F	1
2	5370-09156-00	IC1	TDA 2002 V AUDIO AMPLIFIER	1
3	5280-09012-00	IC2	7442 BCD-DEC DECODER	1
4	5280-09073-00	IC3	7400 QUAD 2 INPUT NAND	1
5	5280-08973	IC4	7408 QUAD 2 INP. AND GATE	1
6	5310-09153-00	IC5	4050 BUFFER	1
7	5310-09154-00	IC6	4068 8 INPUT NAND GATE	1
8	5310-08971-00	IC7	4069 HEX INVERTER	1
9	5250-09157-00	IC8	7805 5 VOLT REG. W/TO 220 CASE	1
10	5430-08972-00	IC10	6821 P.I.A.	1
11	5340-09003-00	IC11	6810 RAM	1
12	5371-09152-00	IC13	1408 D/A CONVERTER	1
13	5160-08938-00	Q2, Q3, Q4	2N4401 NPN TRANSISTOR	3
14				
15	5075-09018-00	ZR1	IN5996A 6.8V ZENER DIODE	1
16				
17	5100-09357-00)	BR1	MDA 200/3N253	1
	5100-09158-00)		BRIDGE RECTIFIER	0
18	5520-09020-00	Y1	3.58 MHz CRYSTAL	1
19	5010-08991-00	R1,R18,R19,R21,R22, R27,R30,R31, R32	RESISTOR, FC, 4.7K OHM, 5% 1/4 WATT	9
20	5010-09036-00	R2 thru R10	RESISTOR, FC, 100 OHM, 5% 1/4W	9
21	5010-09358-00	R12,R15,R28,R36,R38	RESISTOR, FC, 1K OHM, 5% 1/4W	5
22	5010-09181-00	R14	RESISTOR, FC, 1 OHM, 10% 1/2 WATT	1
23	5010-09161-00	R16	RESISTOR, FC, 2.2 OHM, 5% 1/4 WATT	1
24	5010-09361-00	R17	RESISTOR, FC, 220 OHM, 5% 1/2 WATT	1
25				
26	5010-08983-00	R23, R24, R26	RESISTOR, FC, 3.3K OHM, 5% 1/4 WATT	3
27	5010-09179-00	R25	RESISTOR, FC, 3.3M OHM, 5% 1/4 WATT	1
28	5010-09035-00	R29	RESISTOR, FC, 47K OHM, 5% 1/4 WATT	1
29	5010-09034-00	R33, R35, R37	RESISTOR, FC, 10K OHM, 5% 1/4 WATT	3
30	5010-09039-00	R34	RESISTOR, FC, 10 OHM, 5% 1/4 WATT	1
31	5043-08980-00	C1, C16 thru C23, C31	CAPACITOR, CER. .01 MFD. 50V. +80%, -20%	10
32	5043-09065-00	C2 thru C10	CAPACITOR, CER. 470 PFD. 50V. +-20%	9
33	5043-09345-00	C11	CAPACITOR, CER. .001 MFD. +-20% 100V.	1
34	5040-09365-00	C12, C30, C36	CAPACITOR, ELECT. 1 MFD. 63V. -10 +50%	3
35	5043-08996-00	C13, C24, C35	CAPACITOR, CER. .1 MFD. 50V. +-20%	3
36	5040-09165-00	C14	CAPACITOR, ELECT. 1,000 MFD. 16V. +-20%	1
37	5040-09164-00	C15	CAPACITOR, ELECT. 470 MFD. 10V. +-20%	1
38	5040-08986-00	C25	CAPACITOR, ELECT. 100 MFD. 10V. +-20%	1
39	5040-08893-00	C26	CAPACITOR, ELECT. 1,000 MFD. 25V. +-20%	1
40	5040-09376-00	C27	CAPACITOR, ELECT. 4700 MFD. 16V. +-20%	1
41	5043-09180-00	C28	CAPACITOR, CER. 47 PFD. 1K V. +-20%	1
42	5040-09343-00)	C29	CAPACITOR, ELECT. 10 MFD. 20V	1
43	5043-09169-00	C32, C33	CAPACITOR, CER. DISC, 27 PFD. 1KV. +-10%	2
44	5041-09163-00	C34	CAPACITOR, TANTALUM 2.2 MFD. 15V. +-20%	1
45	5041-09031-00	C37	CAPACITOR, TANTALUM 1 MFD. 25V. +-20%	1
46	5641-09658-00)	SW1	MOMENTARY SWITCH SPDT	1
47	5645-09330-00	DS1	2 STD, DIP SWITCH	1
48	5731-06314-00	F1, F2	4 AMP SLOW BLOW FUSE	2
49	5732-09178-00		FUSEHOLDER	4
50	5705-09172-00		HEAT SINK THERMALLOY #6072B	1
51	5705-09173-00		HEAT SINK THERMALLOY #6071B	1
52	5705-09199-00		HEAT SINK THERMALLOY #6030	1
53	5700-09004-00		24 PIN SOCKET	1
54	5700-08985-00		40 PIN SOCKET	1
55	5791-09027-00	10J1, 10J3	9 PIN MALE CONNECTOR 09-65-1091	2
56	5791-09028-00	10J2, 10J4	4 PIN MALE CONNECTOR 09-65-1041	2
57				
58	4006-01003-06		6-32x3/8" P-PH-S	3
59	4406-01117-00		6-32 HEX NUT	3
60	5010-09534-00		0 OHM RESISTOR	A/R
61	5824-09248-00	TP1 THR TP4	TERMINAL #1502-1	4
62	5010-09363-00	R11	RESISTOR, FC, 5.6K OHM 5% 1/4 WATT	1
63				
64	5019-09362-00	SR1	RESISTOR, 4.7K OHM 10 PIN SIP	1
65	03-7520-1		TIE WRAP	1
66	4703-00007-00		#6 EXT. LOCKWASHER	3
67	20-9229		THERMAL COMPOUND	.01

NOTES:

1. USE THERMAL COMPOUND BETWEEN IC1 AND IC8, AND HEAT SINKS.
2. CAUTION: AVOID STATIC DISCHARGE DAMAGE TO MOS LOGIC.
3. SYMBOLS SHOWN ON COMPONENTS ARE FOR REFERENCE ONLY.

   DO NOT SCREEN OR STAMP.
4. OBSERVE INDEX MARK OF ALL INTEGRATED CIRCUITS;

   DIODES D1, D2, AND ZR1;

   CAPACITORS C12, C14, C15, C25, C26, C27;

   CONNECTORS 10J1, 10J2, 10J4, 10J3, 10J5;

   POSITION OF TRANSISTORS Q1, Q2, Q3, Q4.

Sound Board Assembly Drawing

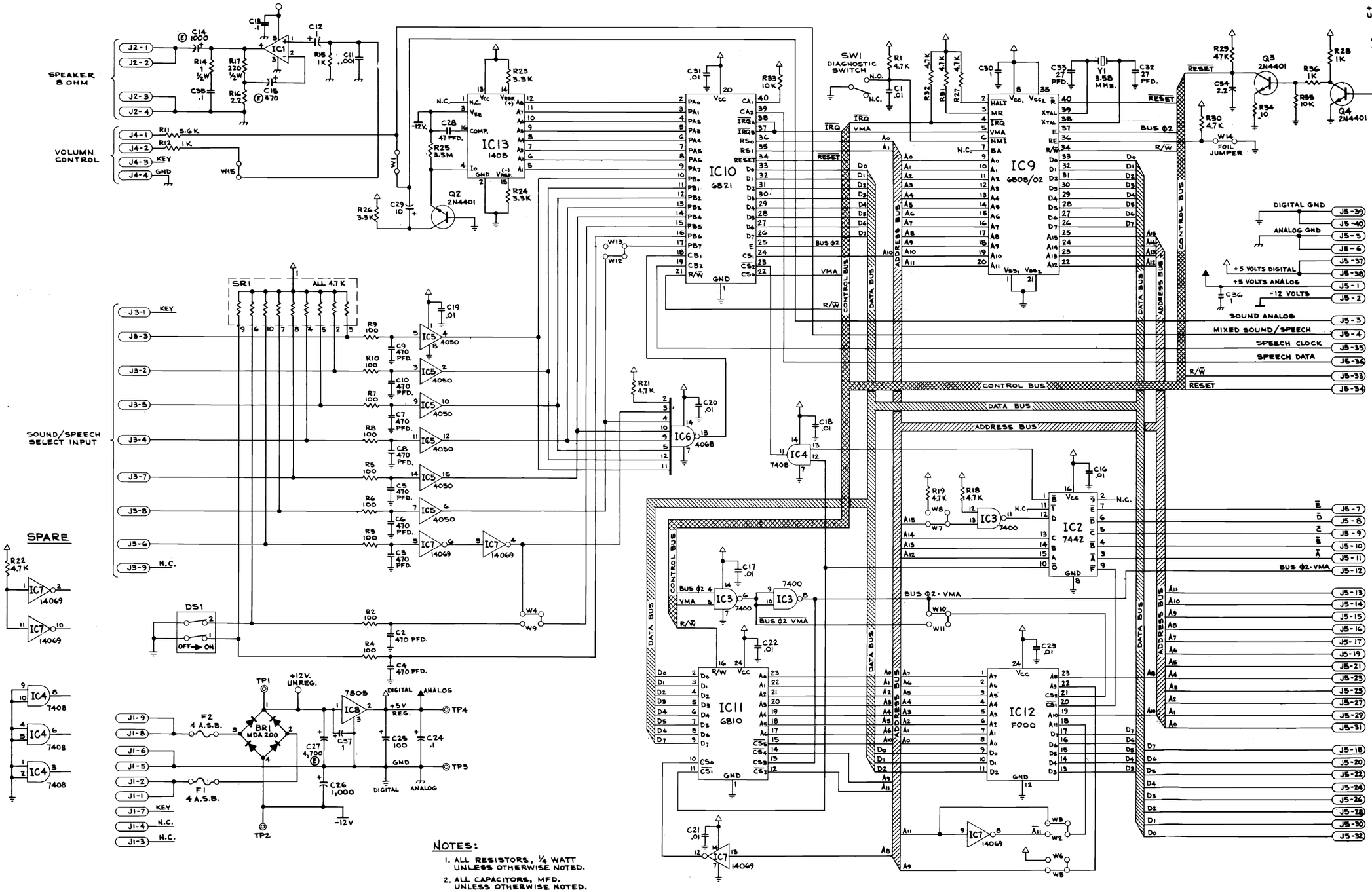

NOTES:

1. ALL RESISTORS, ¼ WATT UNLESS OTHERWISE NOTED.
2. ALL CAPACITORS, MFD. UNLESS OTHERWISE NOTED.

CHAPTER 5 Parts

PLASTIC CABINET

CABINET

PART NO.	DESCRIPTION
20-9374	Control Panel Twist Latch
01-7607	Speaker Grill
03-7695	Monitor Bezel
08-7416	Monitor Glass
31-1208-3021-UP	Screened Marquee
01-7745	Rear Door Locking Strip
5675-09516-00	19" Monitor

REAR DOOR

PART NO.	DESCRIPTION
20-9365	Lock
01-7670	Lock Plate
B-9742	Lock Cam
02-4160	Locking Rod
02-4161	Locking Rod Bushing
20-9364	Door Hinge

CONTROL PANEL

PART NO.	DESCRIPTION
D-10099	Complete Assembly
11-761	Wood Panel
31-1207-3021-UP	Screened Panel Overlay
03-7794	Molding Strip
01-7753	Twist Latch Receptacle
01-7717	Front Hold Down Bracket

POWER GRIP JOYSTICK

PART NO.	DESCRIPTION
C-9680	Complete Assembly
C-9620	Power Grip Handle Assembly
5647-10160-00	Power Grip Button Switch
5647-10163-00	Power Grip Trigger Switch
B-9475	Sliding Interupter Assembly
C-9471	P.C. Board Assembly

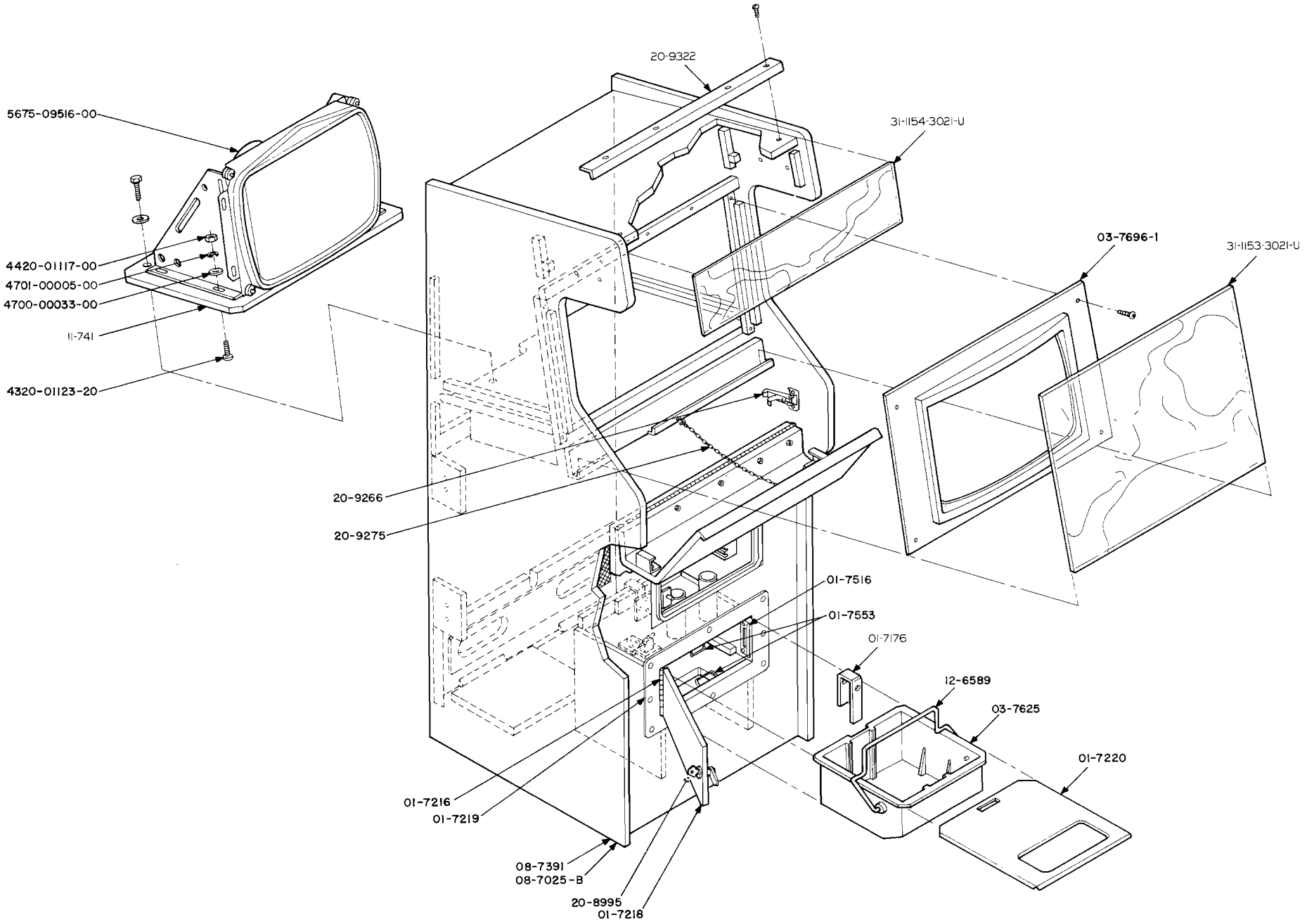
20-9322
5675-09516-00
31-1154-3021-U
03-7696-1
31-1153-3021-U
4420-01117-00
4701-00005-00
4700-00033-00
11-741
4320-01123-20
20-9266
20-9275
01-7516
01-7553
01-7176
12-6589
03-7625
01-7220
01-7216
01-7219
08-7391
08-7025-B
20-8995
01-7218

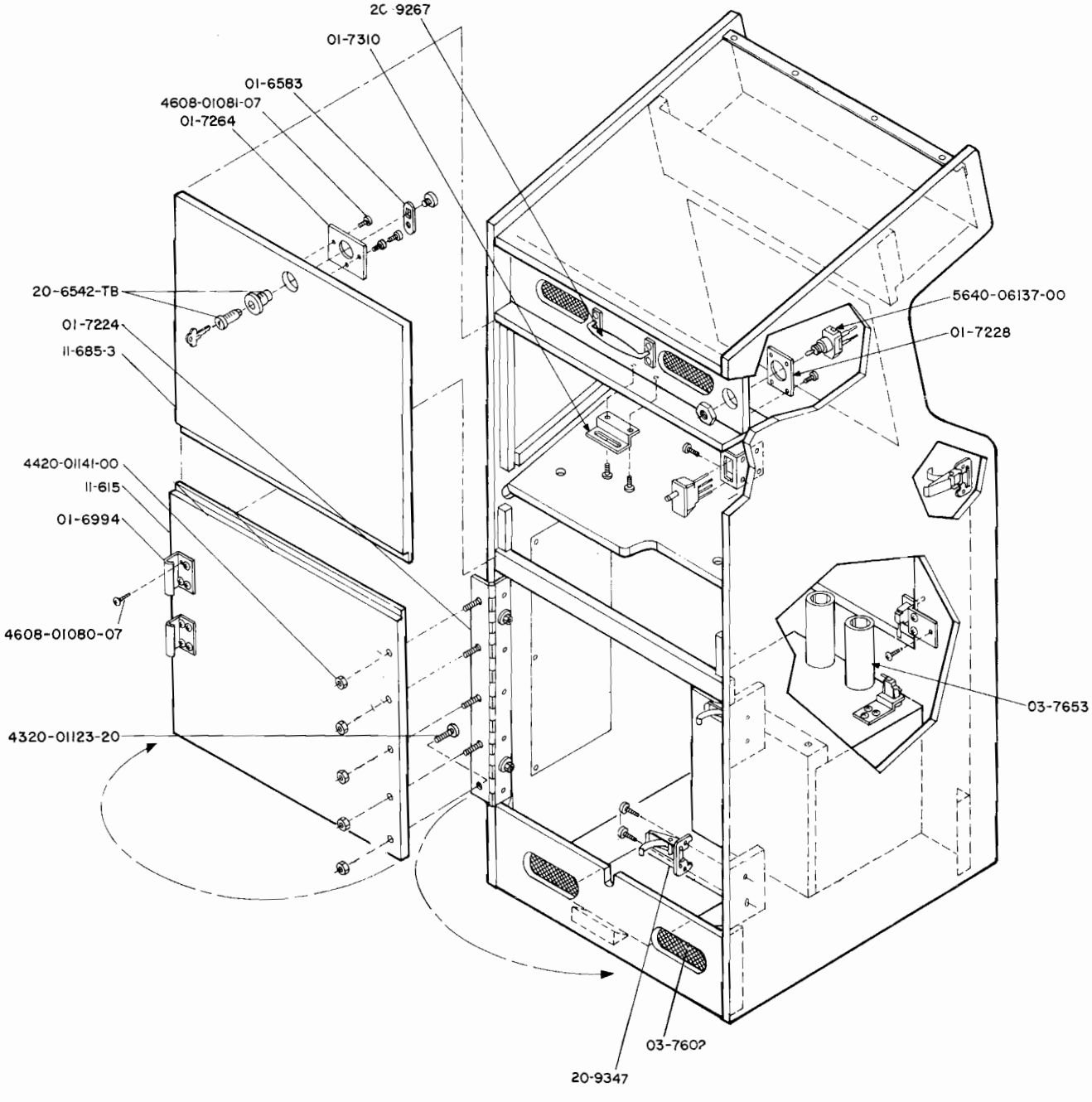
20-9267
01-7310
01-6583
4608-01081-07
01-7264
20-6542-TB
01-7224
11-685-3
4420-01141-00
11-615
01-6994
4608-01080-07
4320-01123-20
5640-06137-00
01-7228
03-7653
03-7602
20-9347

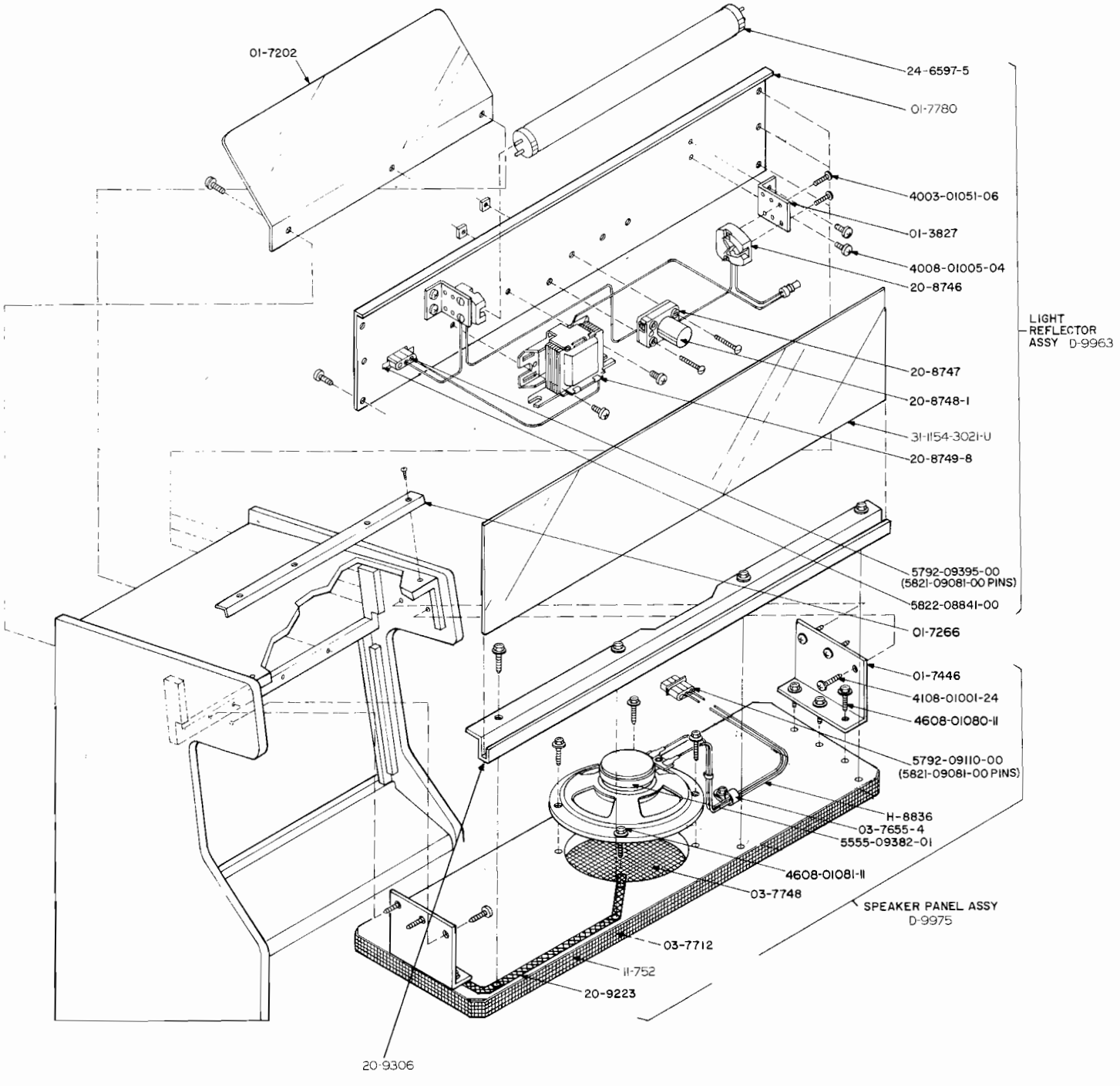
01-7202
24-6597-5
01-7780
4003-01051-06
01-3827
4008-01005-04
20-8746
20-8747
20-8748-1
31-1154-3021-U
20-8749-8
LIGHT REFLECTOR ASSY D-9963
5792-09395-00 (5821-09081-00 PINS)
5822-08841-00
01-7266
01-7446
4108-01001-24
4608-01080-11
5792-09110-00 (5821-09081-00 PINS)
H-8836
03-7655-4
5555-09382-01
4608-01081-11
03-7748
SPEAKER PANEL ASSY D-9975
03-7712
11-752
20-9223
20-9306

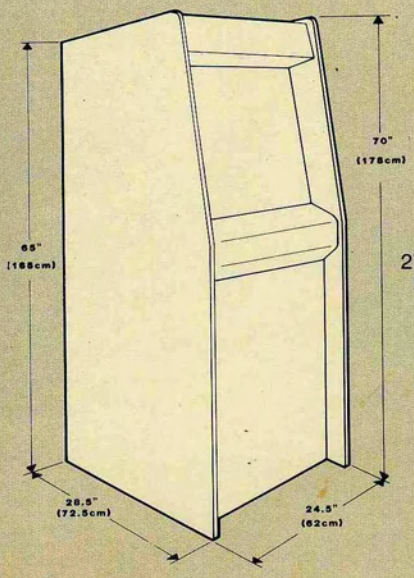

UPRIGHT
Weight
270 lbs. (122.5 kg.) uncrated
290 lbs. (131.5 kg.) crated

COCKPIT
Weight
342 lbs. (155 kg.) uncrated
402 lbs. (182.5 kg.) crated

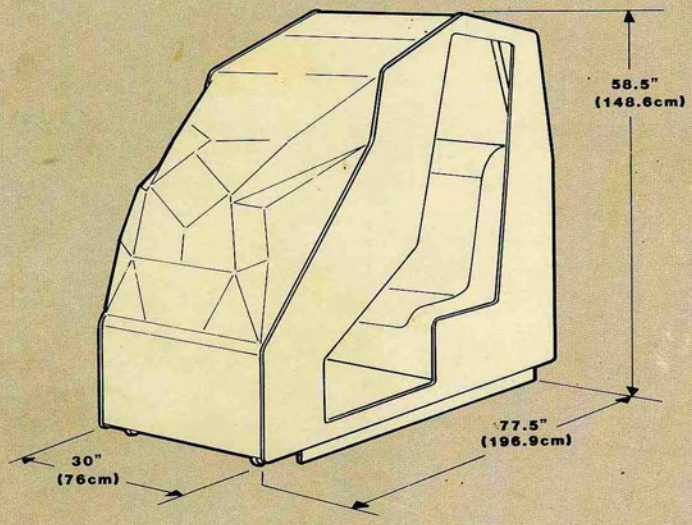

Warning—This equipment generates, uses, and can radiate radio frequency energy and if not installed and used in accordance with the instructions manual, may cause interference to radio communications. It has been certified to comply with the limits for a Class A computing device pursuant to Subpart J of Part 15 of FCC Rules, which are designed to provide reasonable protection against such interference when operated in a commercial environment. Operation of this equipment in a residential area is likely to cause interference in which case the user at his own expense will be required to correct the interference.

POWER REQUIREMENTS
115/230VAC Nominal, 50/60Hz
@2.0/1.0A 230W
(20A surge for one cycle
at power turn on)

Normal Line = 98-126VAC
196-252VAC

High Line* = 113-145VAC
226-290VAC

Low Line* = 88-113VAC
176-226VAC

*Transformer jumpers required.
See service manual.

ENVIRONMENT
Operating Temperature
0° to +45°C ambient
(+32° to +113°F)

Storage Temperature
−40° to +65°C ambient
(−40° to +149°F)
90% RH at 40°C (104°F), non-condensing

MONITOR
19″ Color Raster
non-interlaced
UL, CSA & DHHS Approved

VIDEO SYSTEM**
256 Colors, 340 x 240 PIXEL Resolution
6809E Microprocessor
ROM: 232K BYTES
Video and Scratch RAM: 50K BYTES
CMOS RAM: 1Kx4

SOUND SYSTEM**
2 Channel Stereo, 2- 6808 Microprocessors
ROM: 8K BYTES (2 Systems)

JOYSTICK**
Optical Sensing
49 discrete directions and degrees of movement
(6 separate speeds in 8 directions
plus center off position)

**Patent Pending

Specifications subject to change
without notice.

SERVICE
For the back-up that keeps you out-front,
call Williams toll-free at 800/621-1253.
In Illinois, call toll-free at 800/572-1324.

NOTICE: "BLASTER" is a trademark of Williams Electronics, Inc.
BLASTER is designed and created by Vid Kidz.

Williams® ELECTRONICS, INC.
3401 N. California Ave., Chicago, IL 60618
(312) 267-2240, Telex 253095

© 1983, WILLIAMS ELECTRONICS, INC.