—STEREO—

SYSTEM SCHEMATIC CHART

HF-8306-I

AUTOMATIC MUSIC, IN

R-2020 CONTROL AMPLIFIER

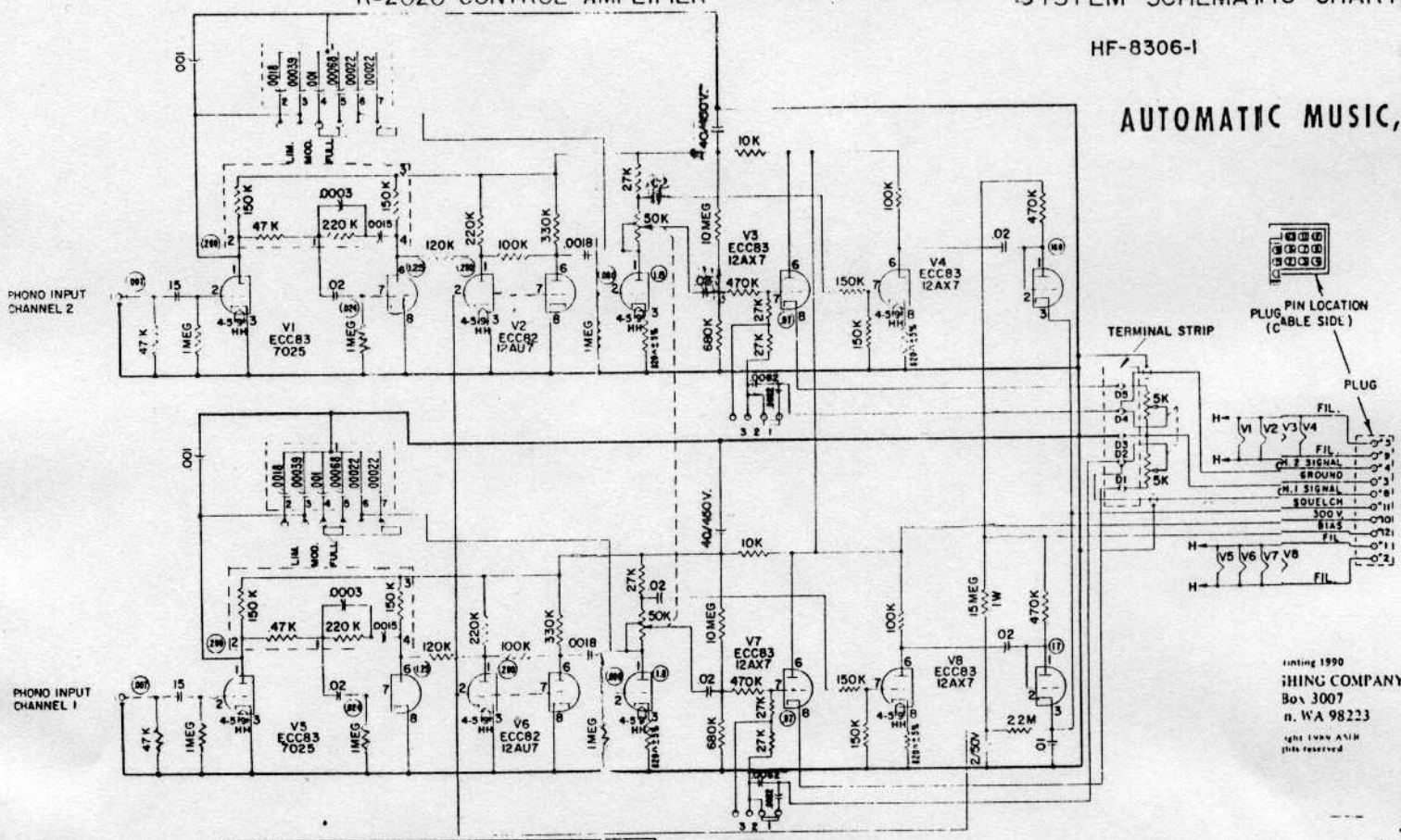

			DC VOLTAGE READINGS								
			PIN 1	PIN 2	PIN 3	PIN 4	PIN 5	PIN 6	PIN 7	PIN 8	PIN 9
V1	V5	ECC83/7025	120V	-70V*	0			130V	-70V*	0	
V2	V6	ECC82/12AU7	190V	♣	0			205V	♣	0	
V3	V7	ECC83/12AX7	195V	0	12V			300V	16.5V*	18.5V	
V4	V8	ECC83/12AX7	-30V*	-30V*	♣			170V	0	0	

* MEASURED WITH A VTVM

♣ MEASUREMENTS UNRELIABLE AS EVEN A VTVM WILL LOAD CIRCUIT AND VOLTAGES WILL VARY WITH SIGNAL LEVEL.

NOTE:
Capacitor ratings are 500V min unless otherwise noted
Resistor ratings are 1/2 watt and resistance values are ±10% unless otherwise noted
D.C voltages are measured to ground with a 20,000 ohms per volt meter, no signal input
Signal voltages are encircled (001) and measured to ground with an A.C. VTVM.
The signal frequency must be 1KC with volume control at max., high frequency range switch at full and fidelity equalizer set at 1

...inting 1990
...HING COMPANY
Box 3007
...n, WA 98223
...ight 1990 AMI
...hts reserved

L-2156 ADD-ON CONTROL AMPLIFIER

MONAURAL

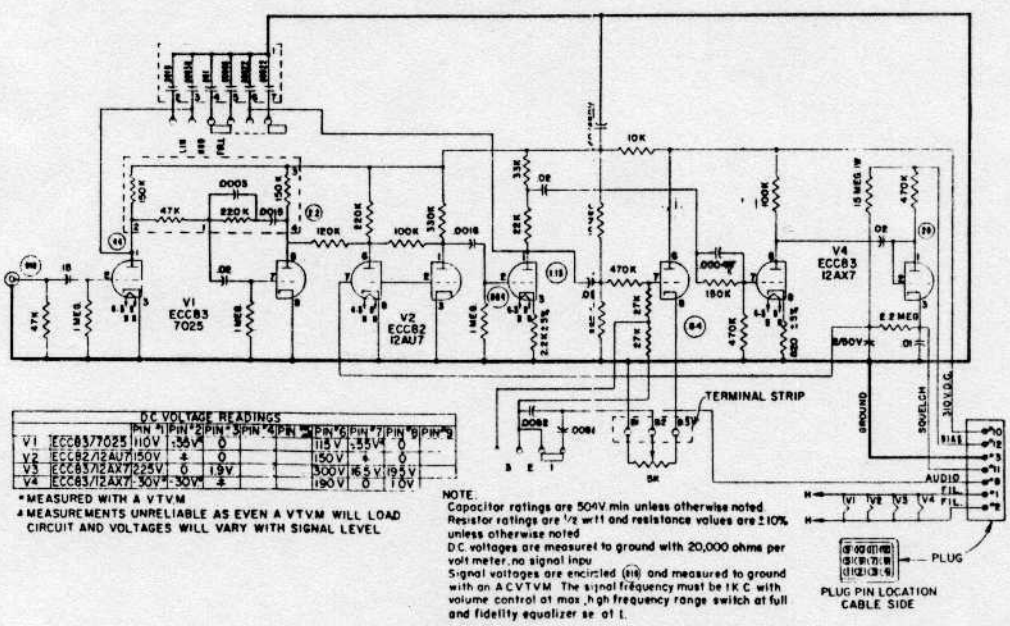

			DC VOLTAGE READINGS								
			PIN *1	PIN *2	PIN *3	PIN *4	PIN *5	PIN *6	PIN *7	PIN *8	PIN *9
V1		ECC83/7025	110V	-55V*	0			115V	-55V*	0	
V2		ECC82/12AU7	150V	♣	0			150V	♣	0	
V3		ECC83/12AX7	225V	0	1.9V			300V	16.5V	19.5V	
V4		ECC83/12AX7	-30V*	-30V*	♣			190V	0	1.0V	

* MEASURED WITH A VTVM

♣ MEASUREMENTS UNRELIABLE AS EVEN A VTVM WILL LOAD CIRCUIT AND VOLTAGES WILL VARY WITH SIGNAL LEVEL

NOTE:
Capacitor ratings are 500V min unless otherwise noted
Resistor ratings are 1/2 wtt and resistance values are ±10% unless otherwise noted
D.C voltages are measured to ground with 20,000 ohms per volt meter, no signal inpu
Signal voltages are encircled (010) and measured to ground with an A.C.V.T.V.M. The signal frequency must be 1K C with volume control at max., high frequency range switch at full and fidelity equalizer se at 1.

			D.C.
			PIN *1
V1	12AU7	84V	
V2	12AU7	195V	
V3	6973	355V	
V4	6973	355V	
V5	5U4GB		36

* MEASURED WITH A

F-10570-A